HD PLATE STYLE FULL WIDTH FRONT BUMPER
2021-25+ BRONCO
SKU: FB25418 / FB25419



PARTS LIST:

1	FB3 Front Bumper	6	12mm Lock Washers
1	Bull Nose Hoop	6	12-1.75mm Hex Nuts
1	Driver/left Inner Support Bracket	2	10-1.5mm x 110mm Hex Bolts
1	Passenger/Right Inner Support Bracket	4	10mm x 30mm x 2.5mm Flat Washers
1	Driver/left Outer Support Bracket	2	10mm Lock Washers
1	Passenger/Right Outer Support Bracket	2	10-1.5mm Hex Nuts
1	Center Mesh Fill Panel	4	8-1.25mm x 25mm Button Head Bolts
2	Square Mesh Fill Panels	6	8-1.25mm x 25mm Hex Bolts
1	Driver/left LED “L” Bracket (Bumper)	4	8-1.25mm x 16mm Hex Bolts
1	Passenger/Right LED “L” Bracket (Bumper)	20	8mm x 24mm x 2mm Flat Washers
1	Driver/left Top Hoop LED “L” Bracket	14	8mm Lock Washers
1	Passenger/Right Top Hoop LED “L” Bracket	6	8mm Hex Nuts
1	Driver/left Low Hoop LED “L” Bracket	4	8mm Flange Nuts
1	Passenger/Right Low Hoop LED “L” Bracket	4	6-1.0mm x 20mm Combo Bolts
1	ACC Plastic Cover	7	6-1.0mm x 25mm Button Head Bolts
1	ACC Mounting Bracket	2	6-1.0mm x 20mm Button Head Bolts
1	License Plate Bracket	10	6mm x 18mm x 1.6mm STD Flat Washers
2	Plastic Plugs for License Plate	4	6mm x 12mm x 1.6mm Small Flat Washers
4	Sensor Retaining Caps	7	6mm Lock Washers
4	20mm x 10mm Foam Spacers	7	6mm Hex Nuts
4	15.5mm x 25mm x 2mm Foam Washer	4	6mm Flange Nuts
4	Plastic Sensor Hole Plugs	2	6mm Nylon Lock Nuts
1	Sensor Cover Kit	8	4mm Self Tapping Screws
6	12mm Plastic Retainers	1	5mm Wrench
2	12mm x 55mm Double Bolt Plates	1	4mm Wrench
2	12mm x 55mm Single Bolt Plates	10	Nylon Wire Ties
6	12mm x 32mm x 3mm Flat Washers		

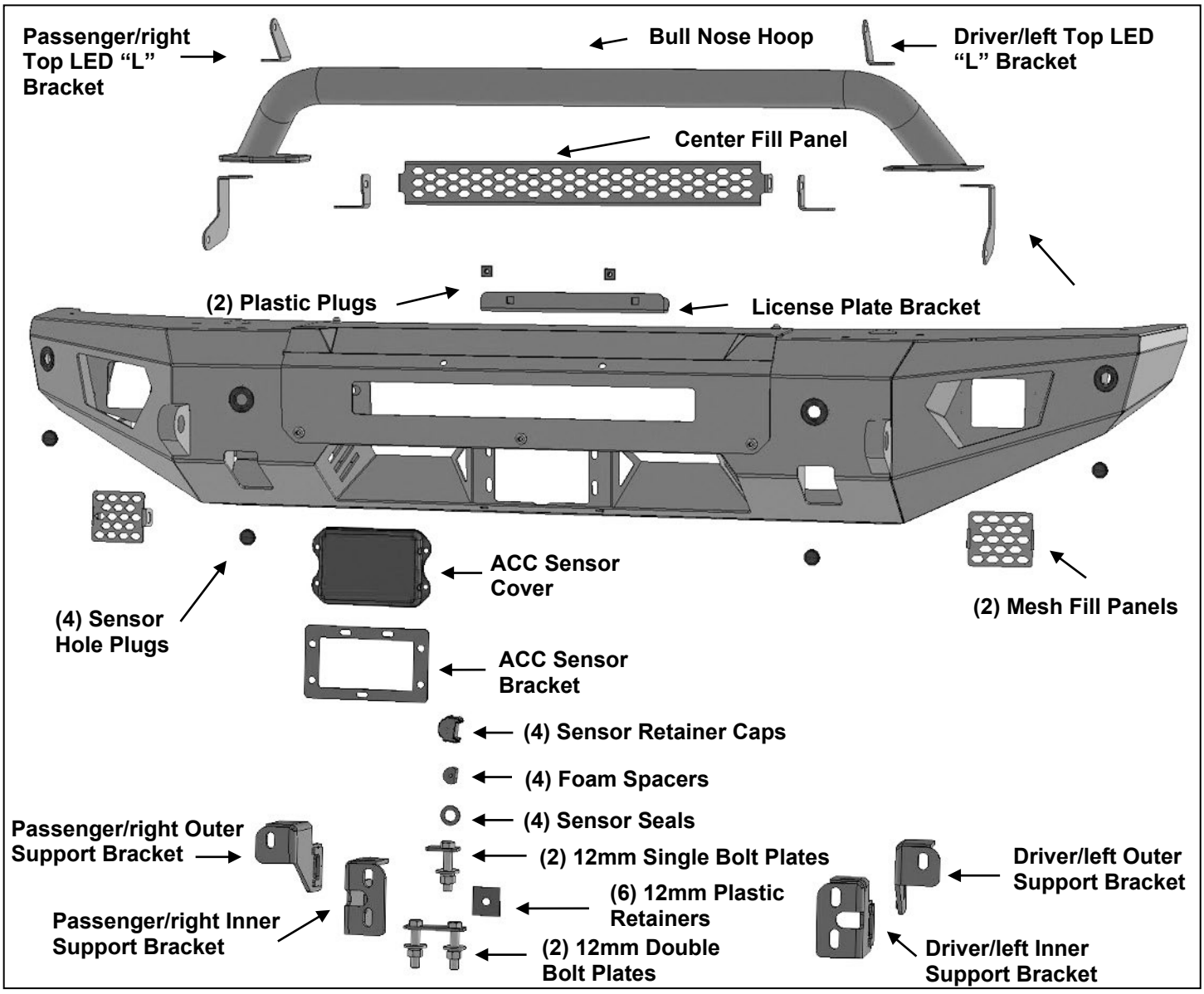

PROCEDURE:

REMOVE CONTENTS FROM BOX AND VERIFY ALL PARTS ARE PRESENT. READ INSTRUCTIONS CAREFULLY. ASSISTANCE IS HIGHLY RECOMMENDED.

1. Start installation from under the front of the vehicle and remove the splash guard, **(Figure 1)**.
2. Determine if the vehicle is equipped with plastic bumper cover or steel option bumper.
   Models with plastic bumper cover:
   a. Remove the plastic covers from the front of the bumper, **(Figures 1 & 2)**.
   Models with optional steel bumper:
   a. Remove the covers surrounding the tow hooks, **(Figure 3)**.
3. Unplug the wiring harness leading to the front bumper. **NOTE**: Harness plug is located behind the driver/left side of the bumper below the headlight, **(Figure 3).**
4. From the front, remove the factory hex bolts attaching the bumper assembly to the end of the frame, **(Figures 2—4)**. **NOTE**: Use assistance to hold the bumper in place while removing the mounting bolts.
5. On models with plastic bumper only, remove the seals around the lower tow hooks.

6. Temporarily unplug and remove the shutter assembly, **(Figure 4—6)**.
   Models with ACC (adaptive cruise control) sensor.
   - **a.** Remove the sensor from the front of the shutter assembly, **(Figure 6)**.
   - **b.** Release the wiring harness from the clips on the back of the shutter assembly, **(Figure 7)**.
   - **c.** Reroute the ACC plug end of the harness down through the hole in the top of the shutter assembly and out through the front, **(Figure 8)**.
7. Remove the plastic nuts attaching the triple nut plate to the back of the driver/left bumper mounting flange on the end of the frame, **(Figure 9)**. Remove the triple nut plate.
8. Select the driver/left inner and outer Support Brackets, **(Figure 10)**. Attach the Support Brackets to the sides of the frame with the included (1) 10mm x 110mm Hex Bolt, (2) 10mm Flat Washers, (1) 10mm Lock Washer and (1) 10mm Hex Nut, **(Figures 10 & 11)**. Push Support Brackets up against back of flange on frame, **(Figure 11)**.
9. Repeat **Steps 7 & 8** to attach the passenger/right Inner and Outer Support Brackets.
10. Reattach the shutter assembly to the vehicle, **(Figure 12)**. Plug shutter harness back into main harness, **(Figure 5)**.
11. Carefully unwrap the Bumper.
12. Determine if the vehicle is equipped with ACC sensor, (Adaptive Cruise Control), and parking sensors.
    Models with ACC sensor:
    - **a.** Gently pull the end of the harness out from the shutter assembly, **(Figure 12)**. Do not pull out the harness, only extend the plug end of the harness.
    - **b.** Select the rectangular Sensor Mounting Bracket, **(Figure 13)**. Attach the ACC sensor to the Bracket with the included (3) 6mm x 25mm Button Head Bolts, (6) 6mm Flat Washers, (3) 6mm Lock Washers and (3) 6mm Hex Nuts, **(Figures 13 & 14)**.
    - **c.** Attach the Plastic Cover to the front and the ACC sensor and Bracket to the back of the Bumper Mount with the included (4) 6mm x 25mm Button Head Bolts, (4) 6mm Flat Washers, (4) 6mm Lock Washers and (4) 6mm Hex Nuts, **(Figures 15 & 16)**.

    Models without parking sensors:
    - **a.** From the front of the bumper, push the included (4) Plastic Plugs into the Sensor Mounts on the Bumper, **(Figure 17)**.

    Models with parking sensors:
    - **a.** Remove sensors and wiring harness from the factory bumper. Note the location of each sensor for proper reinstallation.
    - **b.** Remove the silicone seal from the end of the sensor. Slide the included larger Foam Sensor Seal over front of sensor, **(Figure 18)**.
    - **c.** Insert sensor with Foam Seal into the outer sensor mount on the back of the Bumper, **(Figure 20)**.
    - **d.** Place Foam Spacer over end of sensor. Push Sensor Retaining Cap onto sensor mount and lock into mounting holes, **(Figure 19)**.
    - **e.** Repeat previous **Steps** to install remaining sensors.
    - **f.** Attach the factory wiring harness to the Bumper and plug into sensors. Secure harness to back of Bumper with included Wire Ties.
13. Determine if Mesh Fill Panels or LED accessory lights will be installed. **NOTE**: Lights not included. Remove top-center panel from Bumper if necessary for installation, (optional).
    Center LED light installation in top-center panel, (light sold separately).
    - **a.** Select the Left and Right Inner “L” Brackets, **(Figure 20)**. Attach the Brackets to the top of the (2) mounting tabs on the back of the bumper with the included (2) 8mm x 25mm Hex Bolts, (4) 8mm Flat Washers, (2) 8mm Lock Washers and (2) 8mm Hex Nuts. Leave loose at this time.
    - **b.** Attach the LED light assembly to the “L” Brackets with the included (2) 8mm x 16mm Hex Bolts, (2) 8mm Lock Washers and (2) 8mm Flat Washers, **(Figure 20)**. Do not fully tighten hardware at this time. **IMPORTANT**: “L” Brackets are designed for 8mm light mounting hardware only.
    - **c.** Follow light manufacturer’s instructions to properly wire light once bumper has been installed.

    Center Fill Panel installation in top-center panel, (do not install lights with fill panels).

a. Select the Inner Left and Right "L" Brackets, **(Figure 20)**. Attach the Brackets to the top of the (2) mounting tabs on the back of the bumper with the included (2) 8mm x 25mm Hex Bolts, (4) 8mm Flat Washers, (2) 8mm Lock Washers and (2) 8mm Hex Nuts. Leave loose at this time.
b. Attach the Center Fill Panel to the "L" Brackets with the included (2) 8mm x 25mm Hex Bolts, (4) 8mm Flat Washers, (2) 8mm Lock Washers and (2) 8mm Hex Nuts, **(Figure 21)**.
c. Push Fill Panel up against back of Bumper. Align Panel to Bumper and tighten hardware. .

Outer LED light installation (lights sold separately).
a. Attach (1) light to the slot in the bottom of the driver/left side light opening, **(Figure 22)**.
b. Repeat the above Steps for remaining light installation.
c. Follow light manufacturer's instructions to properly wire light once bumper has been installed.

Outer Fill Panel installation, (do not install lights with fill panels).
a. Select the (1) Square Fill Panel. Attach the Fill Panel to the tabs on the back of the Bumper with the included (2) 6mm Button Head Combo Bolts and (2) 6mm Flange Nuts, **(Figure 22)**.
b. Push Fill Panel up against back of Bumper. Align Panel to Bumper and tighten hardware.
c. Repeat the previous Steps to install the remaining Fill Panel.

14. Attach the Top Hoop to the top of the Bumper with the included (4) 8mm x 25mm Button Head Bolts, (4) 8mm Lock Washers, (4) 8mm Flat Washers and (4) 8mm Flange Nuts, **(Figure 23)**. **NOTE**: Installation is optional but Hoop must be installed before Bumper is attached to vehicle. Fully tighten Hoop hardware.
15. Select (1) 12mm Single Bolt Plate. Insert the Single Bolt Plate through the outer mounting hole in the driver/left mounting plate on the back of the Bumper, **(Figure 24)**. Thread (1) 12mm Plastic Retainer onto the Bolt Plate to help hold it in place, **(Figure 25)**. Repeat this **Step** to attach (1) 12mm Double Bolt Plate to the inner mounting holes on the Bumper. **NOTE**: Plastic Retainers are supplied to help with Bumper installation, use is not mandatory for installation.
16. Repeat **Step 15** to attach the Single and Double Bolt Plates on the passenger/right side of the Bumper.
17. With assistance, hold the Bumper assembly up to the end of the frame and Support Brackets. Guide the Bolt Plates through the frame and Support Brackets. Attach the driver/left end of the Bumper to the frame and Brackets with the included (3) 12mm x 32mm Flat Washers, (3) 12mm Lock Washers and (3) 12mm Hex Nuts, **(Figure 26)**. Repeat this **Step** to attach the passenger/right side of the Bumper. Snug but do not fully tighten hardware.
18. Center the Bumper to the vehicle and fully tighten all hardware.
19. **Models with front license plate**, attach the included License Plate Bracket to the front of the Bumper with (2) 6mm x 20mm Button Head Bolts, (4) 6mm x 12mm Small Flat Washers and (2) 6mm Nylon Lock Nuts, **(Figure 31)**. Snap the included (2) Plastic Plugs into the holes in the Bracket for the license plate.
20. Remove rubber plugs from top of Bumper as necessary for wiring access to Hoop.
21. Determine if bar style LED light will be installed in Hoop, (light not included). **NOTE**: Check for clearance between light and vehicle.

LED Light Installation above and/or below Bumper Hoop, (LED Light Bar not included):
a. Select the driver/left Lower LED "L" Bracket. Attach the Bracket to the slot in the tab on back of Hoop with the included (1) 8mm x 25mm Hex Bolt, (2) 8mm Flat Washers, (1) 8mm Lock Washer and (1) 8mm Hex Nut, **(Figure 27)**. Repeat this **Step** to install the passenger/right Lower "L" Bracket.
b. Attach the LED Light Bar to the Brackets with the included (2) 8mm x 16mm Hex Bolts, (2) 8mm Lock Washers and (2) 8mm Flat Washers, **(Figure 27)**.
c. Repeat the previous Steps to attach a LED Light Bar to Upper "L" Brackets above the Bumper Hoop, **(Figure 28)**.

22. Models with ACC sensor, plug wiring harness into sensor.
23. Reinstall the lower splash guard. Reattach the top-center panel to the Bumper if removed.
24. Do periodic inspections of the installation to make sure that all hardware is secure and tight.

To protect your investment: Do not use any type of polish or wax that may contain abrasives that could damage the finish. Mild soap may be used to clean the Bumper.

Driver/left Side Installation Pictured

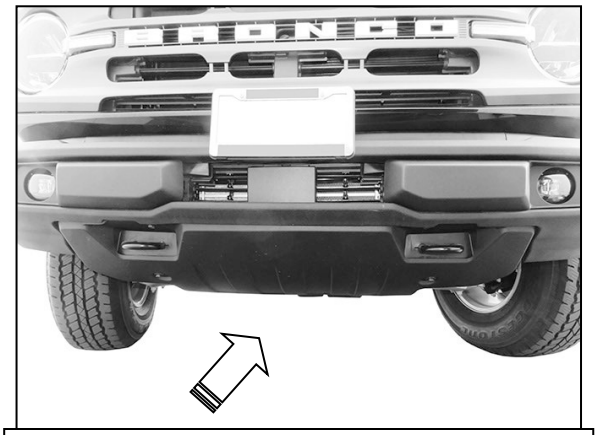

(Fig 1) Remove splash guard (arrow). Model with plastic bumper cover pictured.



(Fig 2) Models with plastic bumper cover (see Fig 1), remove bumper pads from bumper (driver/left side pictured)



Unplug wiring harness leading to the front bumper. Remove hex bolts to remove bumper

(Fig 3) Model with steel bumper, remove cover from bumper (driver/left side pictured)

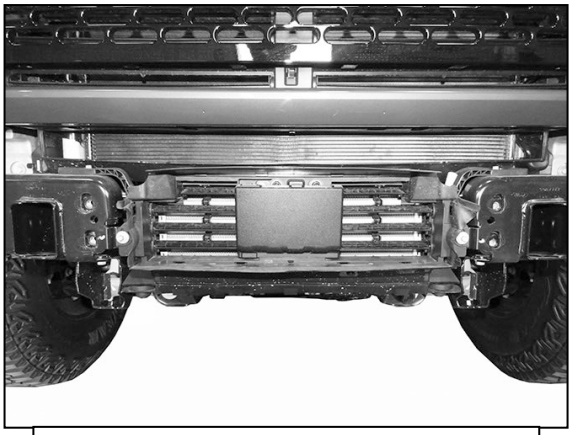

(Fig 4) Remove factory hex bolts from front to remove bumper assembly

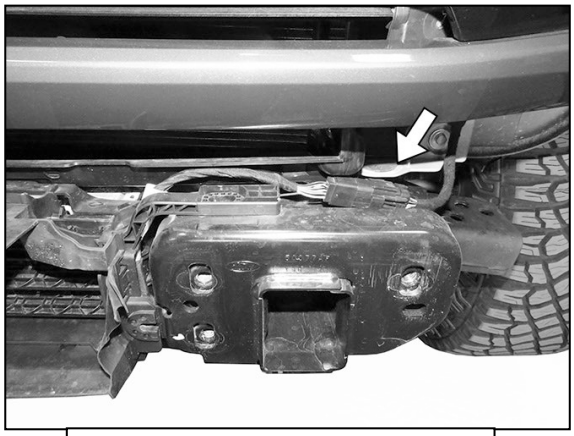

(Fig 5) Unplug harness leading to shutter assembly (arrow)

WARNING! Do not remove bumper bolts unless the bumper is properly supported on blocks or stands or the bumper may fall.

Driver/left Side Installation Pictured

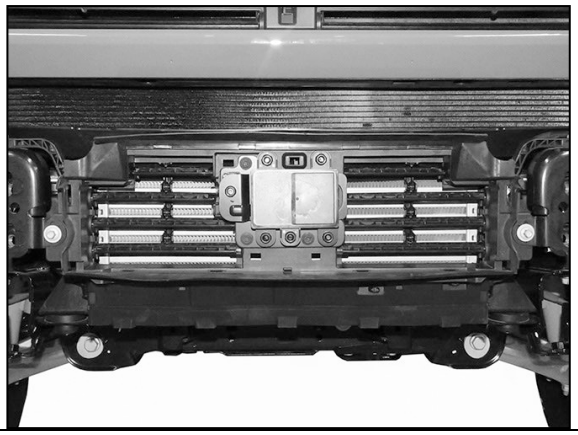

(Fig 6) Remove the shutter assembly. Models with ACC sensor (pictured), unplug and remove sensor from shutter assembly

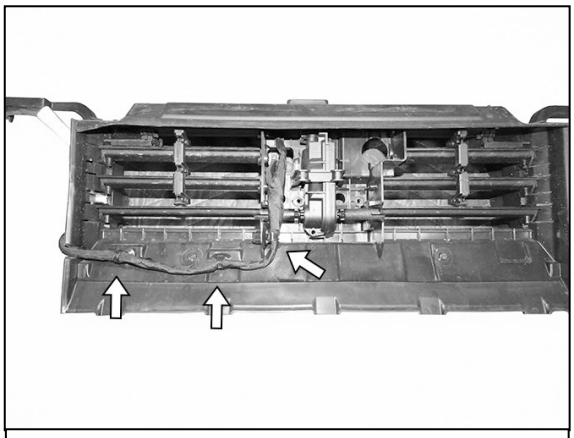

(Fig 7) Models with ACC sensor, release the clips attaching the wiring harness to the sensor (arrows)

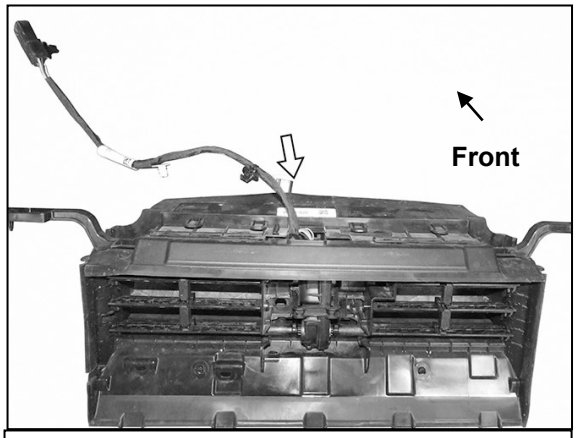

(Fig 8) Models with ACC sensor, insert the ACC plug end down through the hole in the top of the shutter assembly and out through the front (arrow-also see Fig 12)

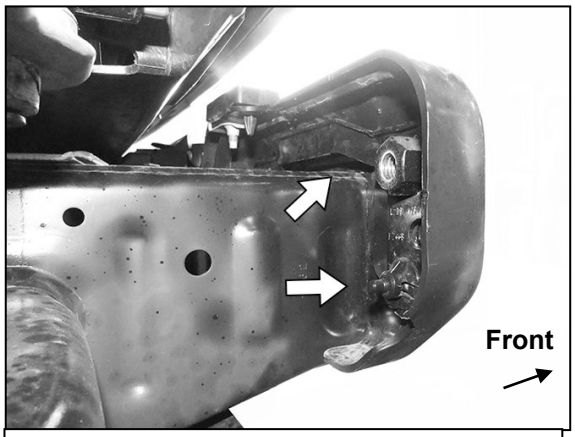

(Fig 9) Remove plastic nuts to remove the triple nut plates (arrows). Passenger/right side pictured

Driver/left Side Installation Pictured

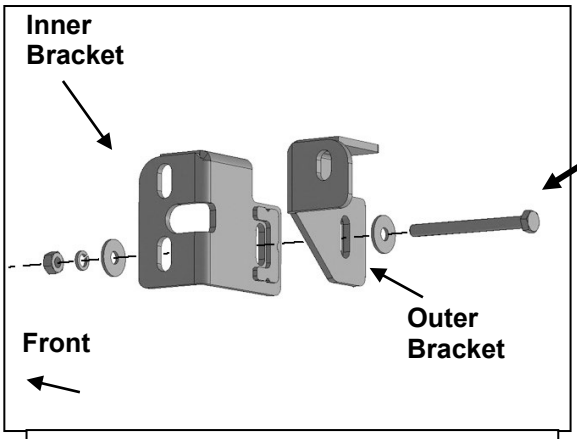

(Fig 10) Attach driver/left Inner and Outer Support Brackets to end of frame

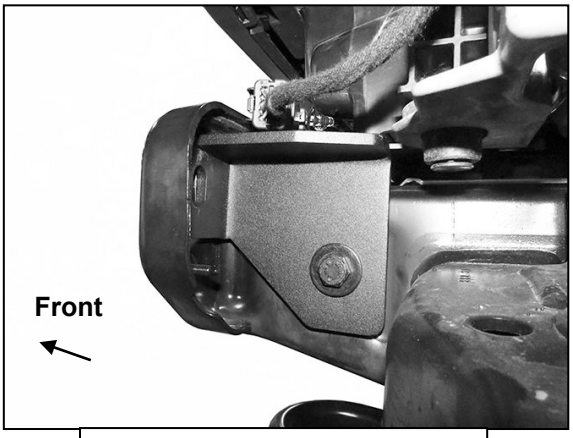

(Fig 11) Driver/left side Outer Support Bracket pictured

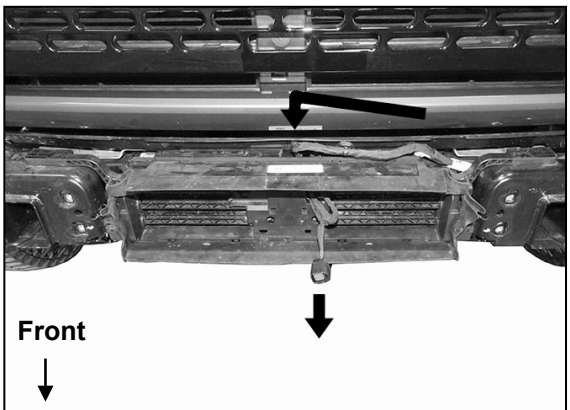

(Fig 12) Models with ACC sensor, reinstall shutter assembly. Gently pull end of harness out through front of shutter assembly until it stops

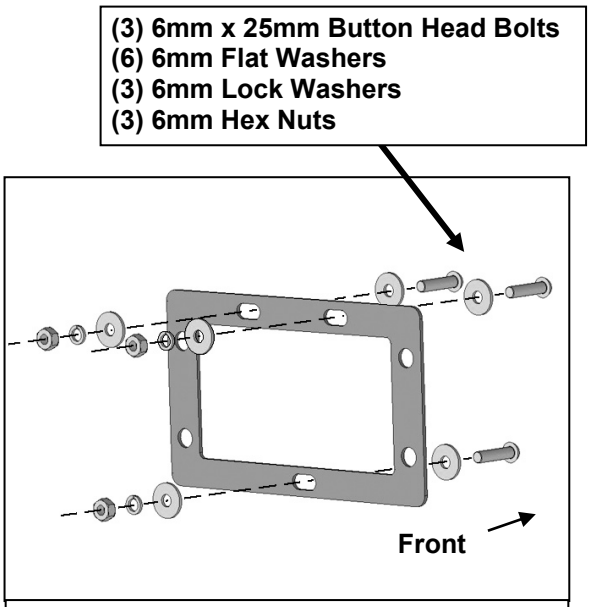

(Fig 13) Models with ACC sensor, attach sensor to back of Mounting Bracket

Driver/left Side Installation Pictured

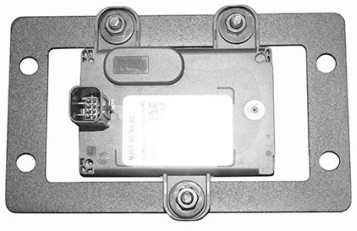

(Fig 14) ACC sensor attached to Bracket

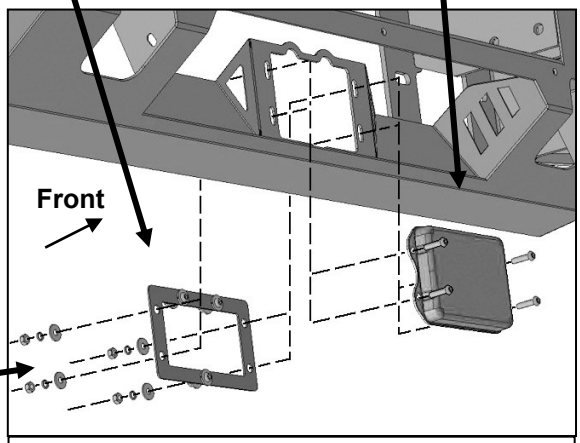

(4) 6mm x 25mm Button Head Bolts
(4) 6mm Flat Washers
(4) 6mm Lock Washers
(4) 6mm Hex Nuts

(Fig 15) Model with ACC sensor, attach Plastic Cover to front side of Bumper and attach sensor and Mounting Bracket to back of Bumper.

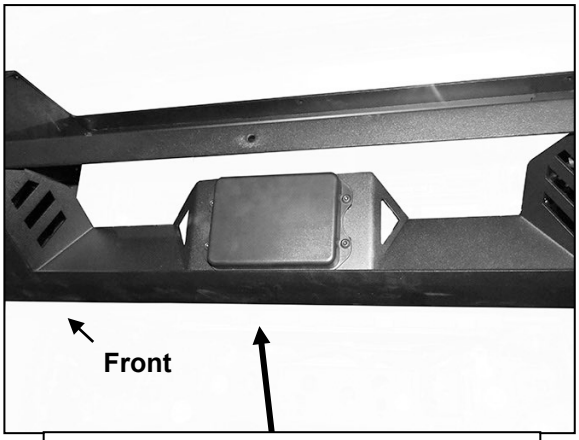

(Fig 16) Sensor Cover and assembly attached to mount on Bumper

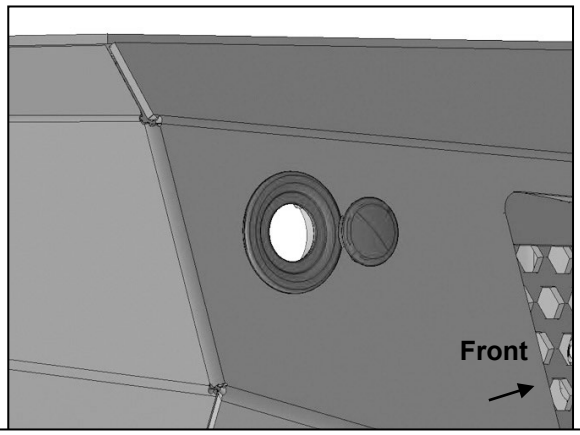

(Fig 17) Models without parking sensors, push the included Plugs into sensor mounts

Driver/left Side Installation Pictured

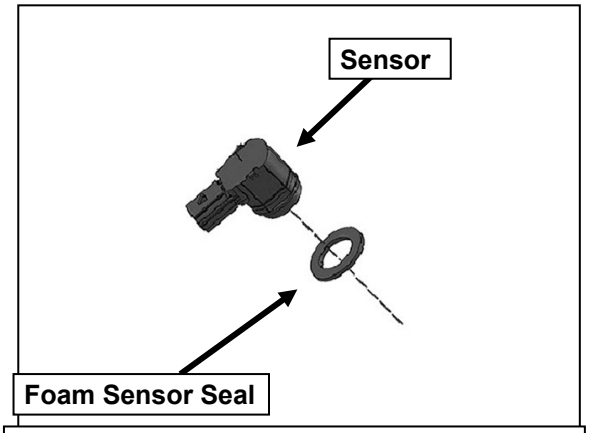

(Fig 18) Remove factory seal from end of sensor. Push Foam Seal onto end of sensor

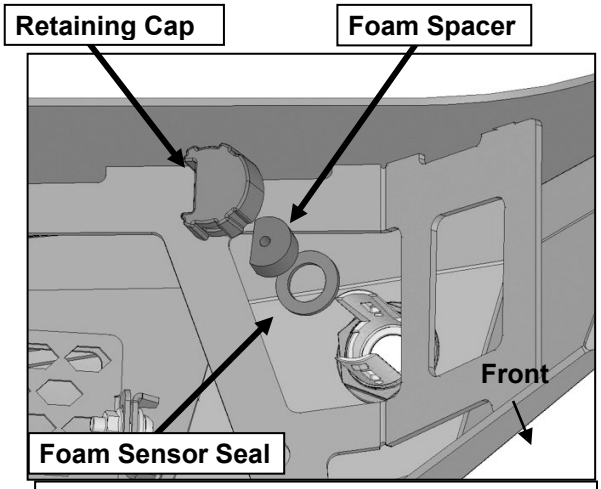

(Fig 19) Push sensor and Seal into back of Mount. Place Foam Spacer over sensor. Snap Retaining Cap onto sensor mount

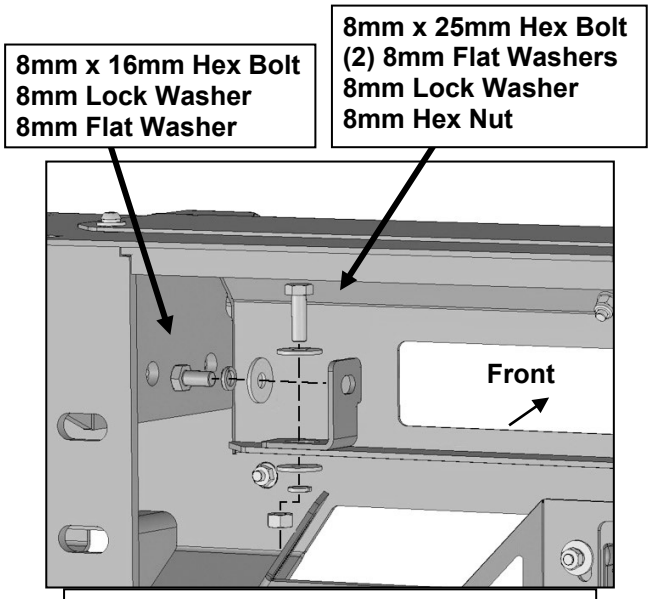

(Fig 20) Attach inner bar style LED light. Do not install light with Fill Panel (light not included)

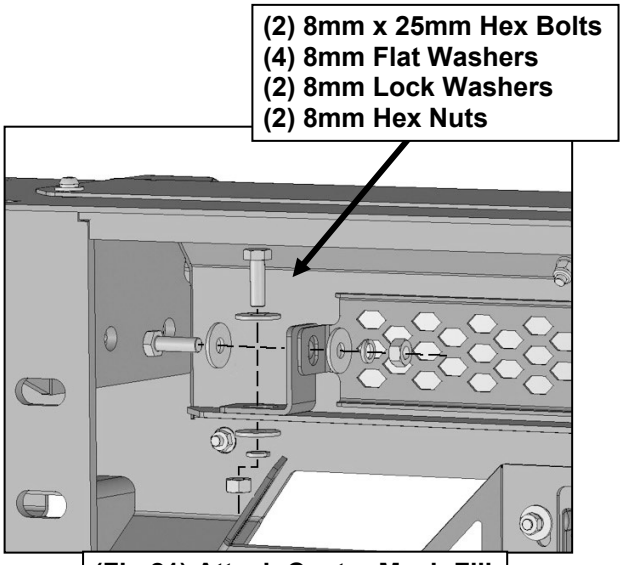

(Fig 21) Attach Center Mesh Fill Panel to "L" Brackets. Do not install light with Fill Panel

Driver/left Side Installation Pictured

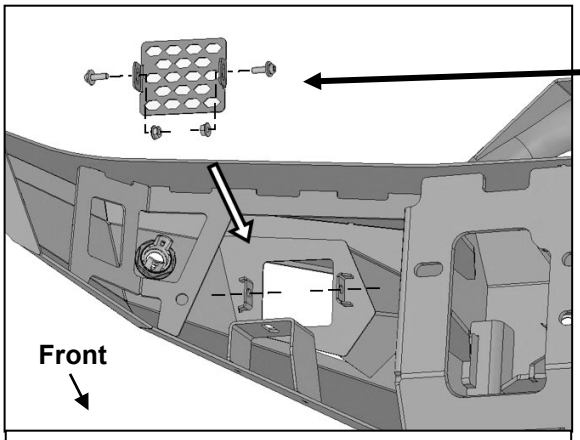

(Fig 22) Attach Outer Mesh Fill Panel or LED cube style light. Do not install light with Fill Panel (lights not included)

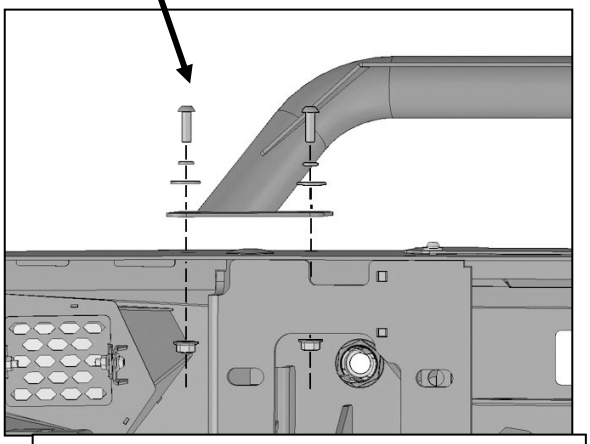

(Fig 23) Attach Bullnose Hoop to top of Bumper, installation is optional (driver/left side illustrated)

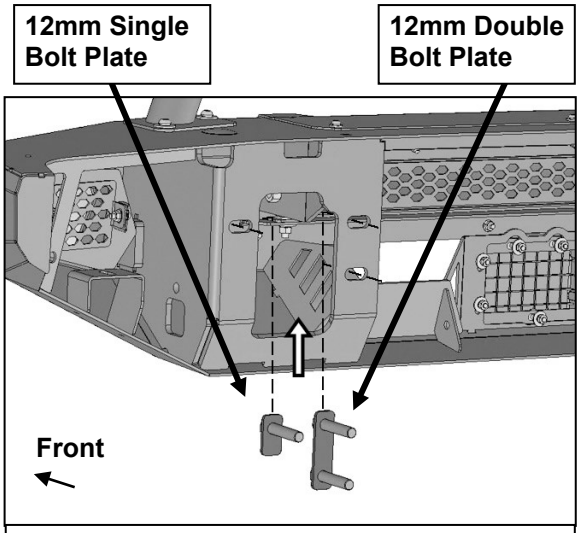

(Fig 24) Insert 12mm Single Bolt Plate into outer slot and 12mm Double Bolt Plate into inner slots. Thread 12mm Plastic Retainers onto Bolt Plates to hold in place (Fig 25)

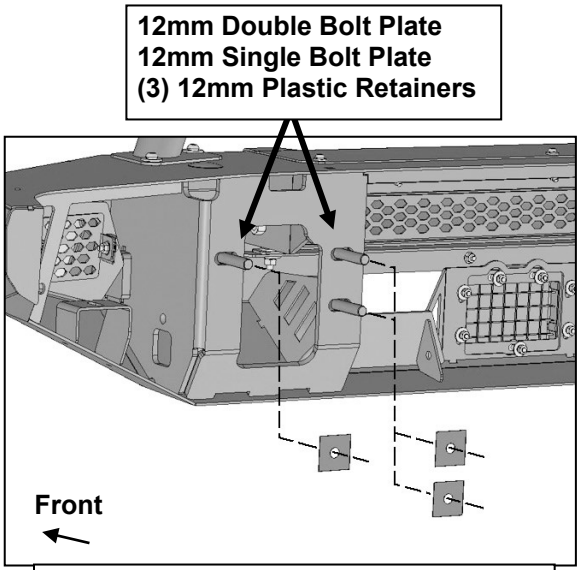

(Fig 25) Thread 12mm Plastic Retainer onto Bolt Plate to hold in place

Driver/left Side Installation Pictured

(3) 12mm Flat Washers
(3) 12mm Lock Washers
(3) 12mm Hex Nuts

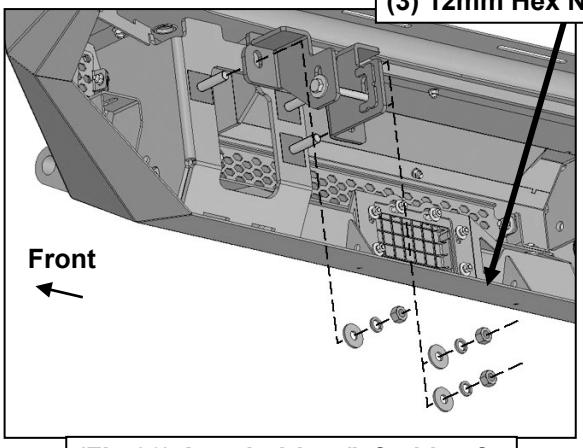

(Fig 26) Attach driver/left side of Bumper to end of frame and Inner and Outer Support Brackets

WARNING! Do not crawl under bumper unless the bumper is properly supported on blocks or stands or it may fall.

8mm x 16mm Hex Bolt
8mm Lock Washer
8mm Flat Washer

8mm x 25mm Hex Bolt
(2) 8mm Flat Washers
8mm Lock Washer
8mm Hex Nut

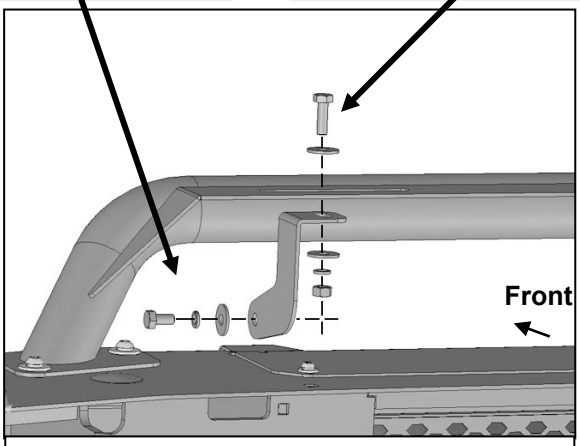

(Fig 27) Attach driver/left Lower Hoop LED "L" Bracket to inside of Hoop (optional)

8mm x 16mm Hex Bolt
8mm Lock Washer
8mm Flat Washer

8mm x 25mm Hex Bolt
(2) 8mm Flat Washers
8mm Lock Washer
8mm Hex Nut

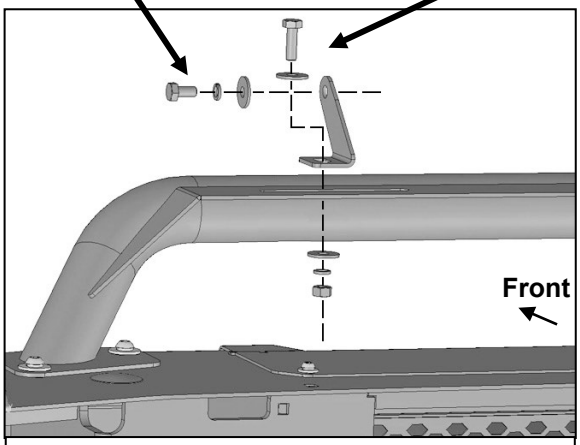

(Fig 28) Attach driver/left Top Hoop LED "L" Bracket to top of Hoop (optional)

(2) 6mm x 20mm Button Head Bolts
(4) 6mm x 12mm Small Flat Washers
(2) 6mm Nylon Lock Nuts

(2) Plastic Plugs

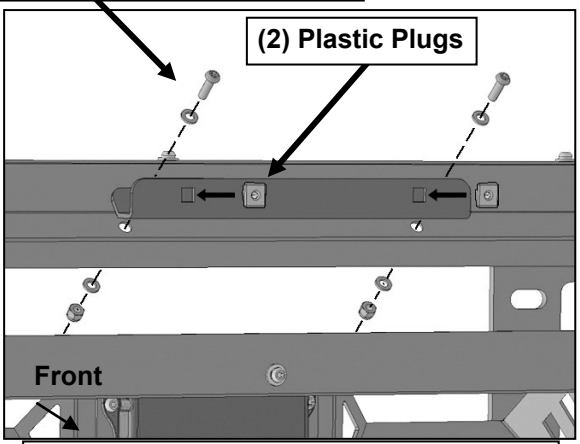

(Fig 29) Attach License Plate Bracket to front of Bumper if required. Push Plastic Plugs into square holes in Bracket