INSTALLATION INSTRUCTIONS

HD OVERLAND DROP SIDE STEP BARS

2021-2026 BRONCO – 4 DOOR

SKU: FB20490



PARTS LIST:

1	Driver/Left Tube	24	10mm x 30mm Hex Bolts
1	Passenger/Right Tube	12	10mm x 27mm OD x 3mm Flat Washers
1	Driver/Left Front Mounting Bracket	24	10mm x 20mm OD x 2mm Flat Washers
1	Passenger/Right Front Mounting Bracket	12	10mm Lock Washers
1	Driver/Left Center Mounting Bracket	12	10mm Nylon Lock Nuts
1	Passenger/Right Center Mounting Bracket	8	8mm x 25mmTriangle Double Bolt Plates
1	Driver/Left Rear Mounting Bracket	16	8mm x 22mm OD x 2mm Flat Washers
1	Passenger/Right Rear Mounting Bracket	16	8mm Nylon Lock Nuts
4	Drop Steps		

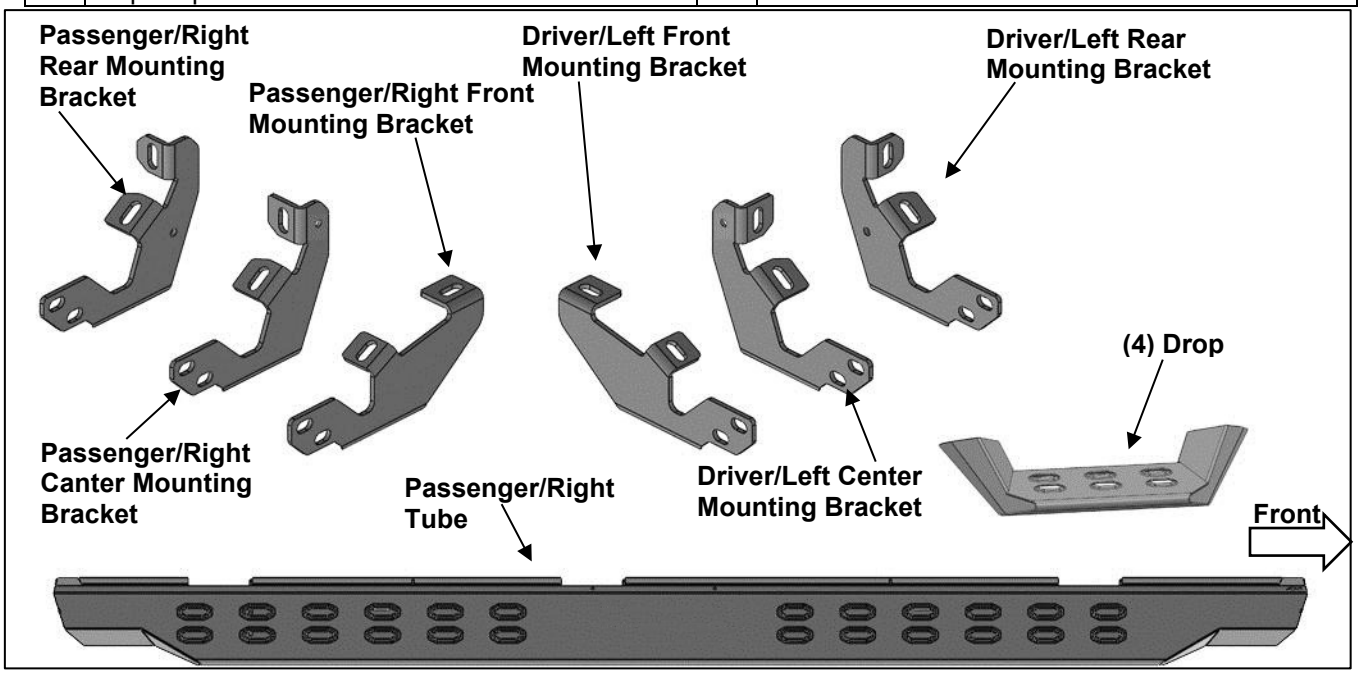

PROCEDURE: REMOVE CONTENTS FROM BOX. VERIFY ALL PARTS ARE PRESENT. READ INSTRUCTIONS CAREFULLY BEFORE STARTING INSTALLATION.

1. Starting from underneath the Passenger/Right body panel, locate the front mounting location and the threaded holes in the body panel, **(Figure 1)**. Remove the plastic plugs covering the holes.
2. Select the Passenger/Right Front Mounting Bracket. Attach the Mounting Bracket to the front location with (2) 10mm Hex Bolts, (2) 10mm Lock Washers and (2) 10mm x 27mm Flat Washers, **(Figure 2)**. Do not tighten hardware.
3. Repeat **Steps 2 & 4** to attach the Center Mounting Bracket and Rear Mounting Bracket to the center and rear locations, **(Figures 3—6)**. Do not tighten hardware. **NOTE:** The Center and Rear Mounting Brackets are similar but are unique. The Rear Mounting Brackets will have a small hole in the back, **(Figure 4)**.
4. Select the Passenger/Right Tube. Insert (2) 8mm Double Bolt Plates into the front (2) sets of (2) holes, **(Figure 7)**. Attach (1) Drop Step to the (2) 8mm Triangle Double Bolt Plates with (4) 8mm x 22mm Flat Washers and (4) 8mm Nylon Lock Nuts, **(Figure 8)**. Do not tighten hardware.
5. With assistance, line up the mounting tabs in the Passenger/Right Tube to the rear faces of the Mounting Brackets. Secure the Tube to the Mounting Brackets with (6) 10mm Hex Bolts, (12) 10mm x 20mm Flat Washers and (6) 10mm Nylon Lock Nuts, **(Figure 9)**. Do not tighten hardware.
6. Level and adjust the Overland Step, then tighten all hardware.
7. Repeat **Steps 1—7** to attach the Driver/Left Overland Step.
8. Do periodic inspections to the installation to make sure that all hardware is secure and tight.

To protect your investment: Do not use any type of polish or wax that may contain abrasives that could damage the finish. Mild soap may be used to clean the Overland Steps.

Passenger/Right side Installation Pictured

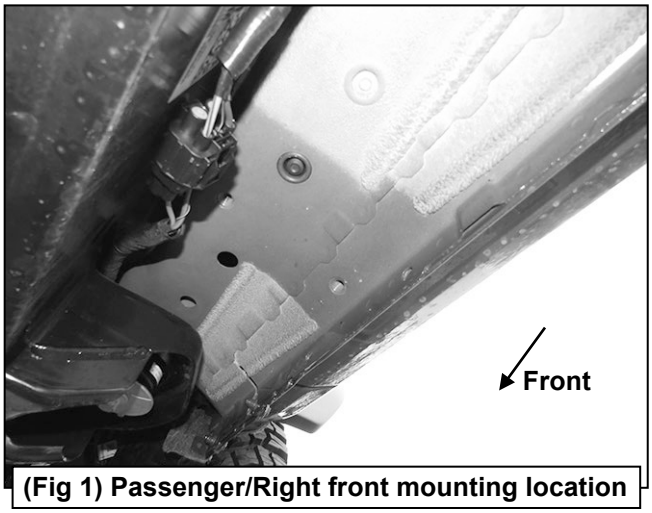

(Fig 1) Passenger/Right front mounting location

(2) 10mm Hex Bolts
(2) 10mm Lock Washers
(2) 10mm x 27mm Flat Washers

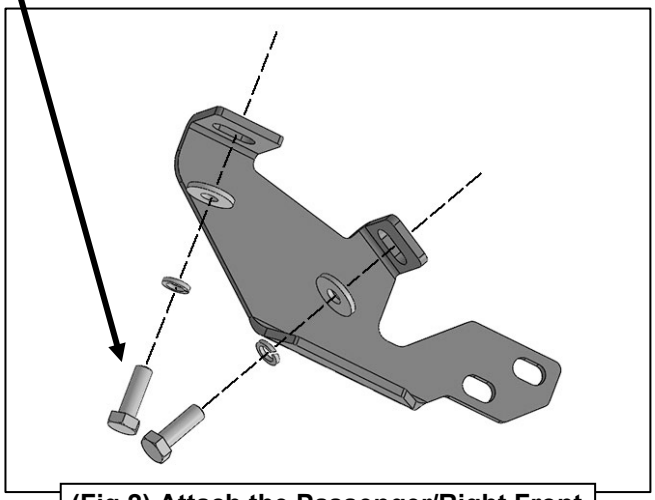

(Fig 2) Attach the Passenger/Right Front Mounting Bracket to the front location

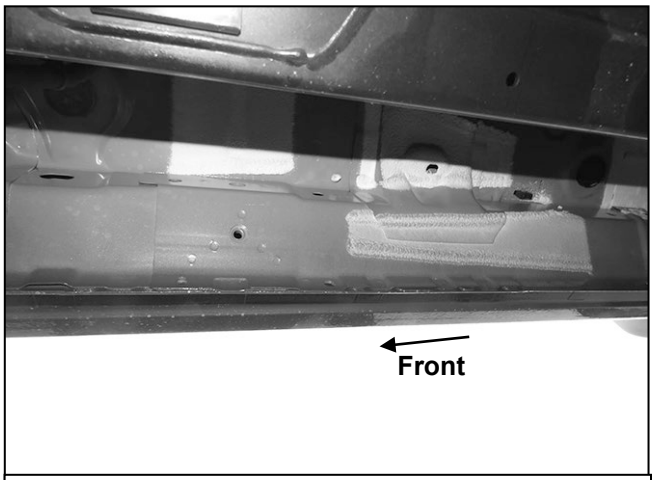

(Fig 3) Passenger/Right center mounting location

The Rear Brackets have a small hole

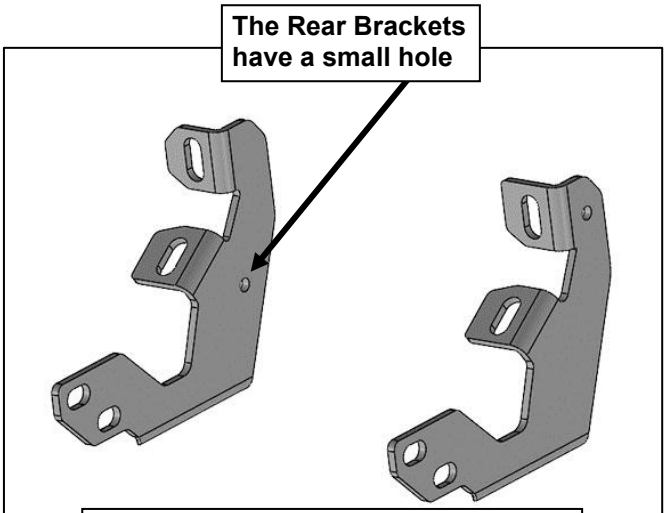

(Fig 4) The Center and Rear Mounting Brackets are similar but are unique

(2) 10mm Hex Bolts
(2) 10mm Lock Washers
(2) 10mm x 27mm Flat Washers

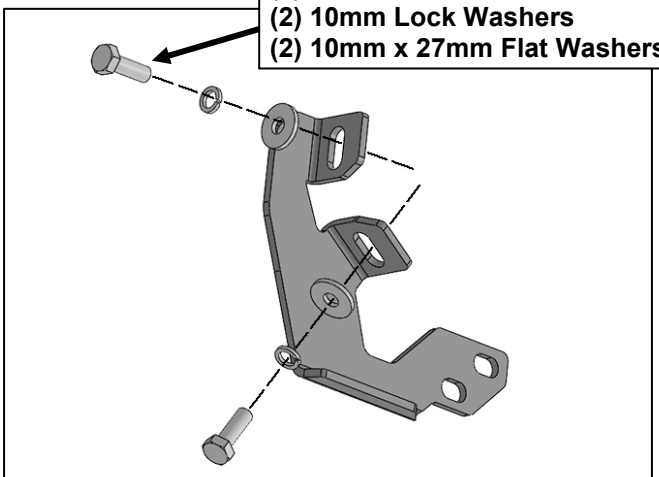

(Fig 5) Attach (1) Passenger/Right Center Mounting Bracket to the center location

Passenger/Right side Installation Pictured

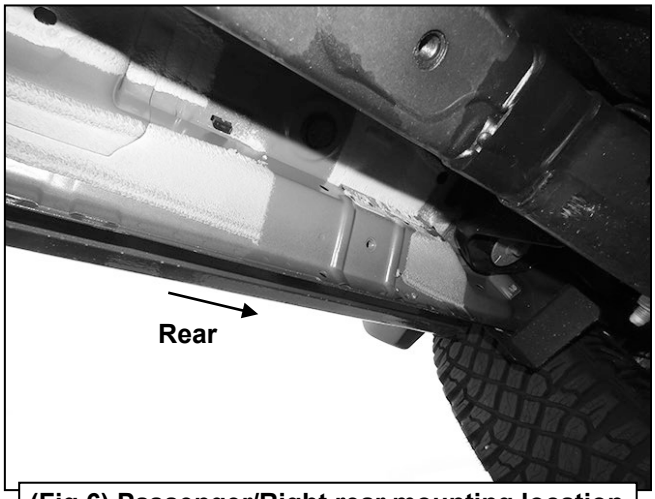

(Fig 6) Passenger/Right rear mounting location

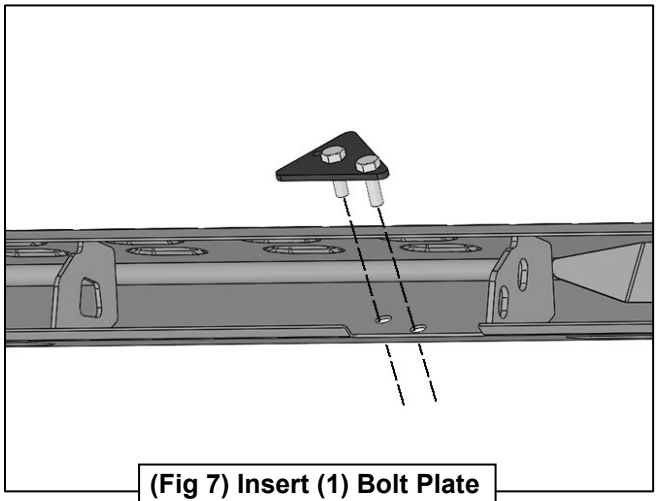

(Fig 7) Insert (1) Bolt Plate into the holes in the Tube

8mm Bolt Plate
(2) 8mm Flat Washers
(2) 8mm Nylon Lock Nuts

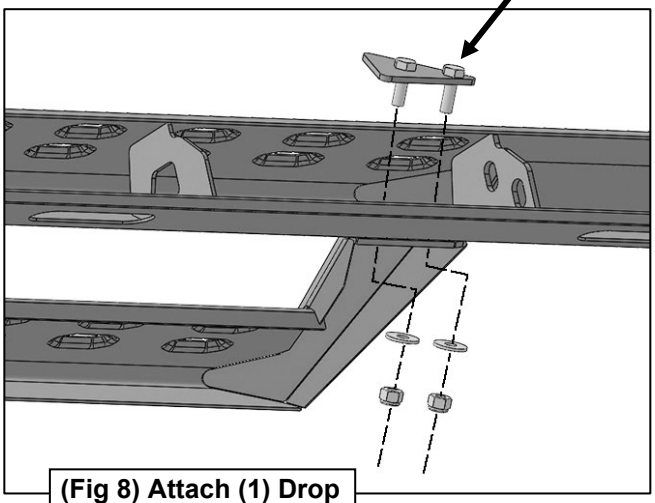

(Fig 8) Attach (1) Drop Step to (2) Bolt Plates

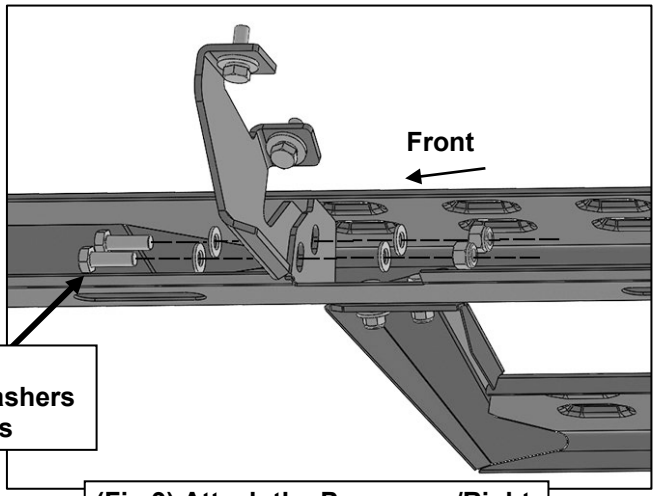

(2) 10mm Hex Bolts
(4) 10mm x 20mm Flat Washers
(2) 10mm Nylon Lock Nuts

(Fig 9) Attach the Passenger/Right Tube to the Mounting Brackets