SCAN TO SEE

INSTALL VIDEO

PR-1 PLATFORM RACK
21-26 BRONCO 2-DOOR
EXCLUDES MODELS WITH SOFT TOP

BARRICADE OFF-ROAD ARMOR

PARTS LIST: FB17168

1	Front Wind Fairing	**(A)**	4	Accessory/Light brackets	**(Q)**
1	Rubber Edge Trim for Fairing	**(B)**	12	6mm x 25mm Double Bolt Plates	**(R)**
2	Front/rear Platform Assemblies	**(C)**	6	Center Support Square Foam Pads	
2	Molded Platform Connectors	**(D)**	2	Rear Medium Rectangular Foam Pads	
1	Driver/left Front Side Rail Mount	**(E)**	2	Rear Clamp Bracket Foam Pads	
1	Passenger/right Front Side Rail Mount	**(F)**	2	8-1.25 x 16mm Button Head Bolts	
1	Driver/left Center Side Rail	**(G)**	2	8mm x 24mm x 2mm Large Flat Washers	
1	Passenger/right Center Side Rail	**(H)**	2	8mm Lock Washers	
1	Driver/left Rear Side Rail	**(I)**	24	6mm x 25mm Carriage Bolts	
1	Passenger/right Rear Side Rail	**(J)**	10	6-1.0 x 25mm Button Head Combo Bolts	
2	Front Side Rail Bracket Spacers	**(K)**	48	6mm x 18mm x 1.6mm Flat Washers	
6	Center Support “L” Brackets	**(L)**	48	6mm Nylon Lock Nuts	
2	2-Hole Rear Bracket Spacer Plates	**(M)**	6	6-1.0mm Flange Nuts	
2	Rear Outer Clamping Brackets	**(N)**	1	5mm Wrench	
1	Driver/left Front Light Bracket	**(O)**	1	4mm Wrench	
1	Passenger/right Front Light Bracket	**(P)**			

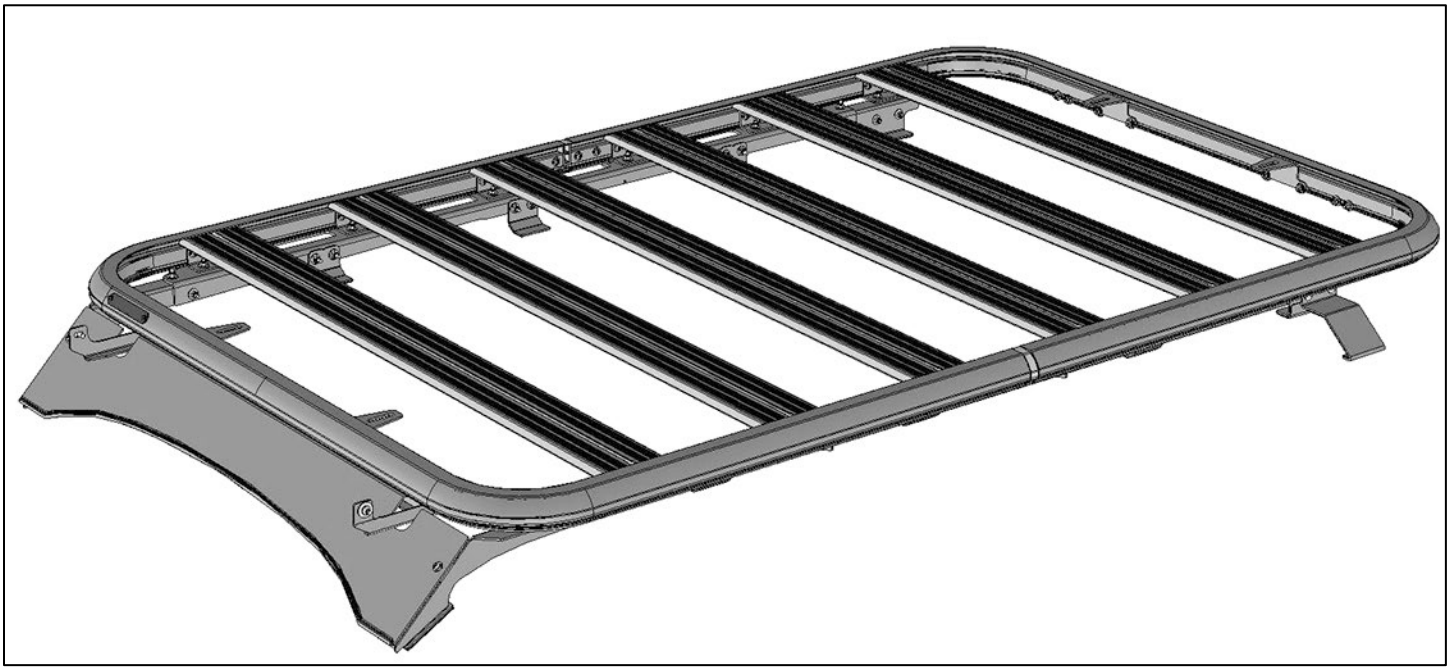

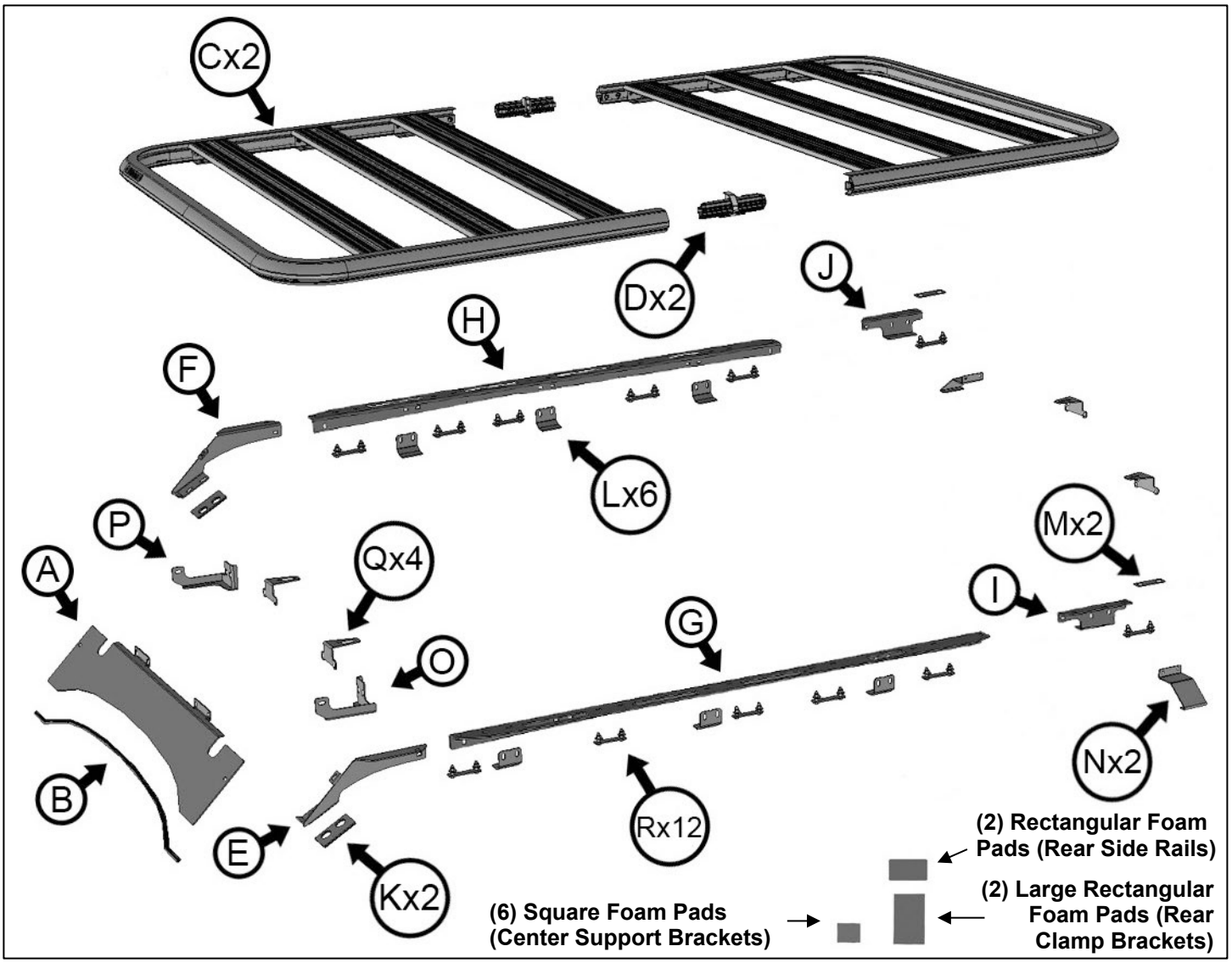

PROCEDURE:

REMOVE CONTENTS FROM BOX. VERIFY ALL PARTS ARE PRESENT. READ INSTRUCTIONS CAREFULLY. ASSISTANCE IS REQUIRED. MODELS WITH FACTORY ROOF RACK, COMPLETE ROOF RACK MUST BE REMOVED.

1. Remove the plastic cover over the accessory mounting location, **(Figure 1)**. Remove the inner clip, **(Figure 2)**.
2. Select (1) Wind Fairing Bracket Shim, **(Figure 3)**, Slide the Shim over the driver/left side mounting studs. Repeat **Steps** to remove the passenger/right side cover and attach the Bracket Shim.
3. Select the driver/left Front Side Panel Bracket and driver/left Center Side Panel, **(Figure 4)**. Attach the Front Side Panel Bracket to the Center Panel with the included (2) 6mm Carriage Bolts, (2) 6mm Flat Washers and (2) 6mm Nylon Lock Nuts. Snug but do not fully tighten hardware.
4. Next, select (3) Center Support “L” Brackets and (3) Small Square Adhesive Backed Foam Pads, **(Figure 5)**. Remove the backing on the Foam Pads and apply the Pads to the bottom of the “L” Support Brackets, **(Figure 6)**.
5. Attach the “L” Support Brackets to the back of the Center Side Rail with the included (6) 6mm Carriage Bolts, (6) 6mm Flat Washers and (6) 6mm Nylon Lock Nuts, **(Figure 6 & 7)**. Leave hardware loose.

6. Select the driver/left Rear Side Panel Mount, **(Figure 8)**. Attach the Rear Mount to the Center Panel with the included (2) 6mm Carriage Bolts, (2) 6mm Flat Washers and (2) 6mm Nylon Lock Nuts. Snug but do not fully tighten hardware.
7. Select (1) Medium Rectangular Adhesive Backed Foam Pad, **(Figure 5)**. Remove the backing on the Foam Pad and apply the Pad to the bottom of the support base on the Rear Side Mount, **(Figure 8)**.
8. Select (1) Outer Clamp Bracket and (1) Large Rectangular Adhesive Backed Foam Pad, **(Figures 5 & 9)**. Apply the Foam Pad to the inside of the Outer Clamp, **(Figure 9)**. Attach the Outer Clamp to the mounting holes in the Rear Side Mount with (2) 6mm Carriage Bolts, (2) 6mm Flat Washers and (2) 6mm Nylon Lock Nuts, **(Figure 10)**. Leave hardware loose.
9. Repeat **Steps 3—8** to assemble the passenger/right Side Rail.
10. Unwrap (1) Platform Panel End Assembly. Slide (2) Molded Connectors into the open ends on the Platform Assembly, **(Figure 11)**. Secure the Connectors to the Platform with (4) 6mm Combo Bolts.
11. Slide the 2nd Platform Assembly over the Connectors, **(Figure 12)**. Secure the 2nd Platform to the Assembly with (4) 6mm Combo Bolts. Push Platforms all the way in against the Connectors and fully tighten hardware.
12. Carefully place the Platform Assembly onto the driver/left Side Rail Assembly. Locate the (6) attachment points along the top of the Side Rail Assembly. Align the “C” Channel Brackets on the inside of the Platform with the (6) mounting locations.
13. Select (1) 6mm Double Bolt Plate. Insert the Bolt Plate up from the outside of the front mounting holes in the Side Rail and through the (2) mounting holes on the Platform, **(Figure 13)**. Secure the Platform to the Bolt Plate and Side Rail with (2) 6mm Flat Washers and (2) 6mm Nylon Lock Nuts. Leave hardware loose at this time. Repeat this **Step** to insert (4) 6mm Double Bolt Plates through the #2 — #5 mounting locations along the Center Side Rail, **(Figures 13—15)**.
14. Next, select (1) 2-hole Spacer Plate. Move to the last mounting location on the Rear Side Rail. Insert the Spacer Plate between the top of the Side Rail and the “C” Channel on the Platform, **(Figure 15)**. Secure the Platform and Spacer to the Bolt Plate with (2) 6mm Flat Washers and (2) 6mm Nylon Lock Nuts. Do not fully tighten hardware at this time.
15. Repeat **Steps 12—14** to attach the passenger/right side of the Platform to the passenger/right Side Rail Assembly.
16. With assistance, carefully lift the complete Platform assembly up and onto the vehicle. Do not slide the Platform on the roof of the vehicle to prevent damage to the finish.
17. Attach the front end of both Side Rails to the threaded studs and previously installed Bracket Shims with the included (4) 6mm Flange Nuts or reuse the factory flange nuts, **(Figures 16 & 17)**.
18. Move to the driver/left rear of the Platform Assembly. Hook the end of the Outer Clamp Bracket into the slot above the rear side window, **(Figure 18)**. Repeat this **Step** to attach the passenger/right Outer Clamping Bracket.
19. Adjust the (6) “L” Center Support Brackets up or down as necessary to properly level and support the center of the Platform assembly and fully tighten Support Bracket hardware only, **(Figure 19)**.
20. Next, select the Front Wind Fairing and Edge Trim. Push the Edge Trim onto the forward edge of the Fairing, **(Figure 20)**.
21. Remove the (4) 6mm Flange Nuts and Washers from the (4) preinstalled inner 6mm T-Bolts, **(Figure 21)**. Reuse the Flange Nuts and Washers to attach the bent end of the Wind Fairing to the T-Bolts on the inside of the Platform. Attach the front of the Fairing to the tabs on the end of the Siderails with (2) 6mm Button Head Combo Bolts and (2) 6mm Flange Nuts, **(Figure 22)**. Align the Fairing to the Platform and Side Rails.
22. Check the Platform assembly for alignment, adjust as necessary and fully tighten all hardware.
23. Determine if included light brackets will be installed (optional-lights not included).
    Bar style LED Light Brackets (install through Wind Fairing).
    a. Remove the (2) 6mm Flange Nuts and Washers from the (2) preinstalled outer 6mm T-Bolts, **(Figure 23)**. Select the driver/left Front Light Bracket. Insert the Bracket through the back of the opening in the Wind Fairing, **(Figure 23)**. Reuse the Flange Nuts and Washers to attach the inner end of the Bracket to the T-Bolts, **(Figure 24)**. Repeat this **Step** to attach the passenger/right Light Bracket.

b. Attach light to the Brackets with the included (2) 8mm x 16mm Button Head Bolts, (2) 8mm Lock Washers and (2) 8mm Flat Washers, **(Figure 24)**.

Accessory or Light Brackets.

a. Remove the (4) 6mm Flange Nuts and Washers attaching the Wind Fairing to the inner 6mm T-Bolts, **(Figure 25)**. Reuse the Flange Nuts and Washers to attach the Accessory Bracket to the T-Bolts and over the tabs on the Fairing.

b. Repeat previous **Step** to attach the rear Accessory/Light Brackets as desired, **(Figure 26)**.

24. Do periodic inspections to the installation to make sure that all hardware is secure and tight.

To protect your investment, Do not use any type of polish or wax that may contain abrasives that could damage the finish. Mild soap may be used to clean the Roof Rack.

Driver/left Side Installation Pictured

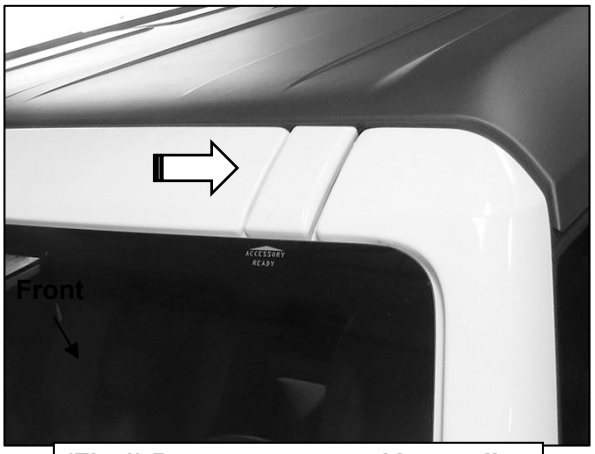

(Fig 1) Remove cover and inner clip

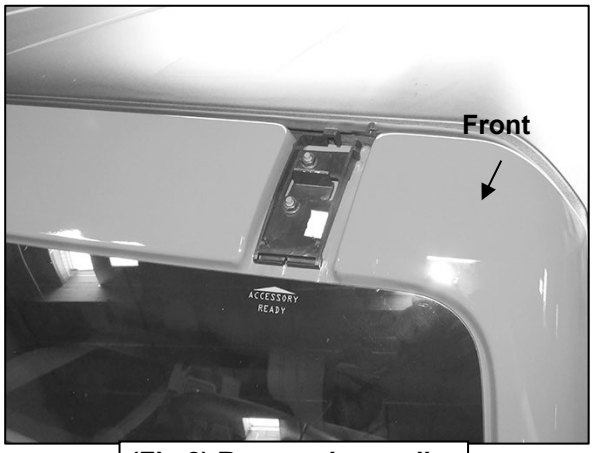

(Fig 2) Remove inner clip

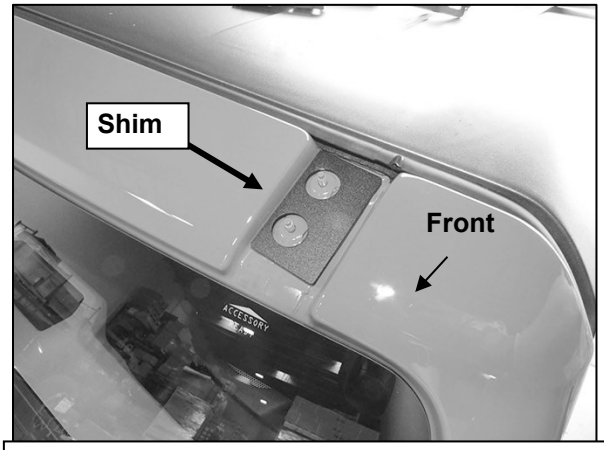

(Fig 3) Place Bracket Shim over threaded studs

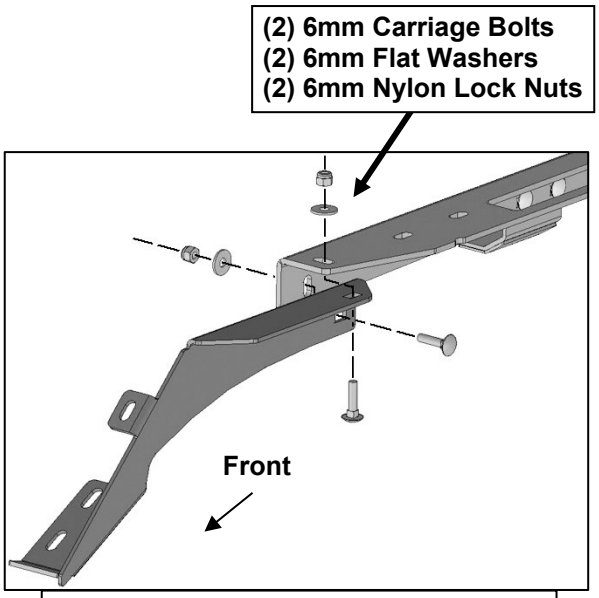

(Fig 4) Attach driver/left front Side Rail Mount to outside of Center Side Rail

Driver/left Side Installation Pictured

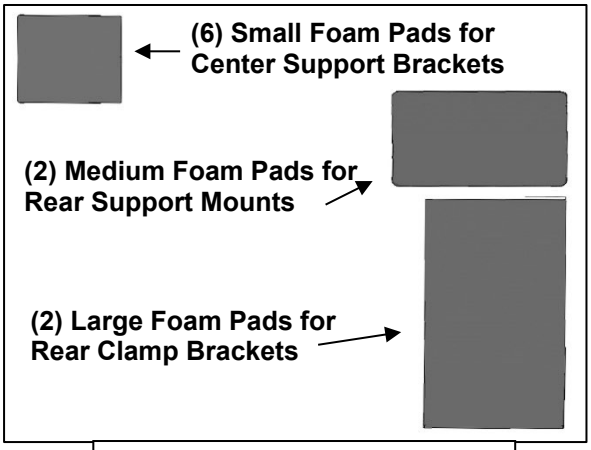

(Fig 5) Adhesive Backed Foam Pad identification illustration

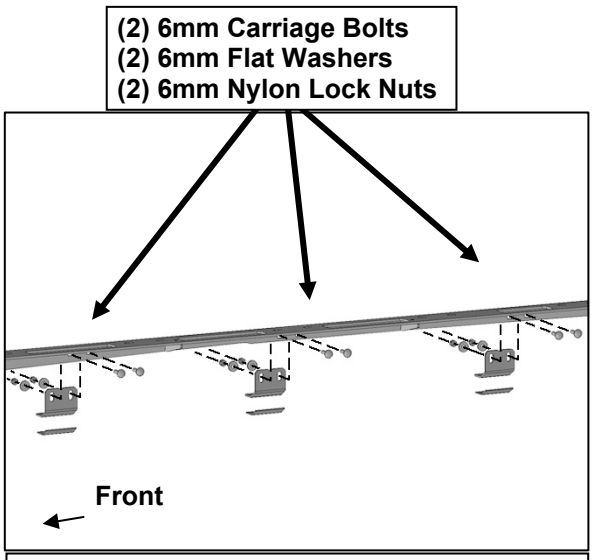

(Fig 6) Attach (3) "L" Support Brackets to the back of the driver/left Center Rail. Apply Adhesive Backed Foam Pads to bottom of Support Brackets (also see Fig19)

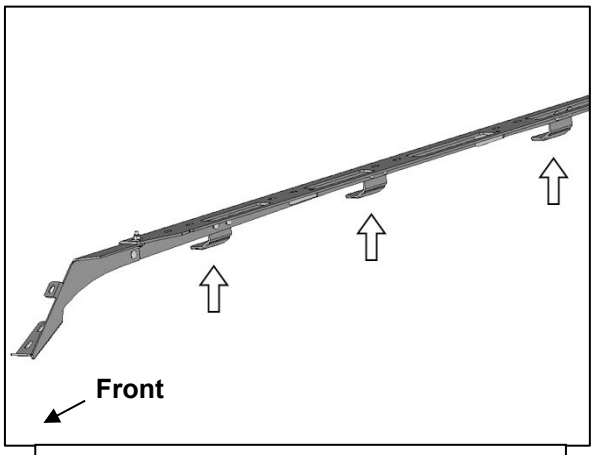

(Fig 7) Attach (3) "L" Support Brackets to the back of the driver/left Center Rail

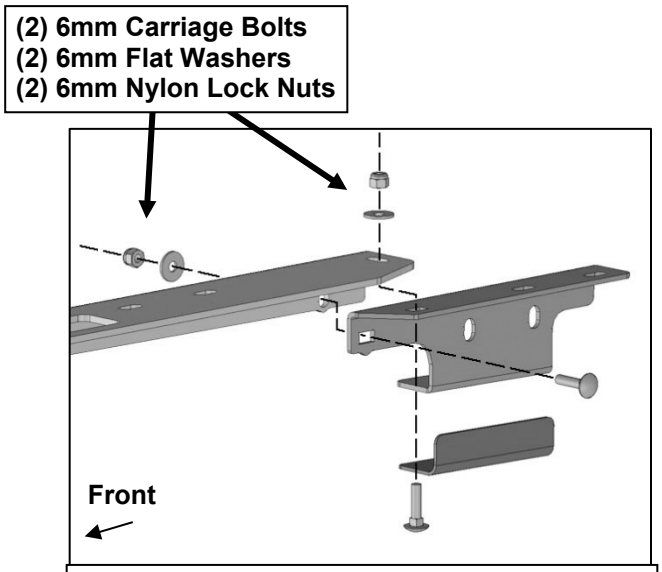

(Fig 8) Attach driver/left Rear Side Rail to Center Rail. Apply Adhesive Backed Medium Foam Pad to bottom of Side Rail Mount

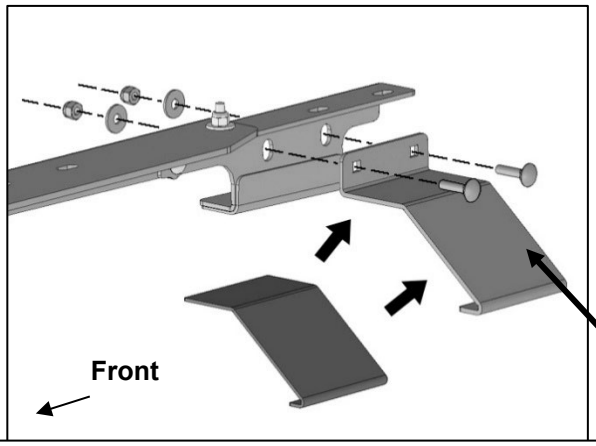

(2) 6mm Carriage Bolts
(2) 6mm Flat Washers
(2) 6mm Nylon Lock Nuts

(Fig 9) Attach Rear Clamping Bracket to outside of Rear Side Rail. Apply Adhesive Backed Large Foam Pad to inside of Clamping Bracket

Driver/left Side Installation Pictured

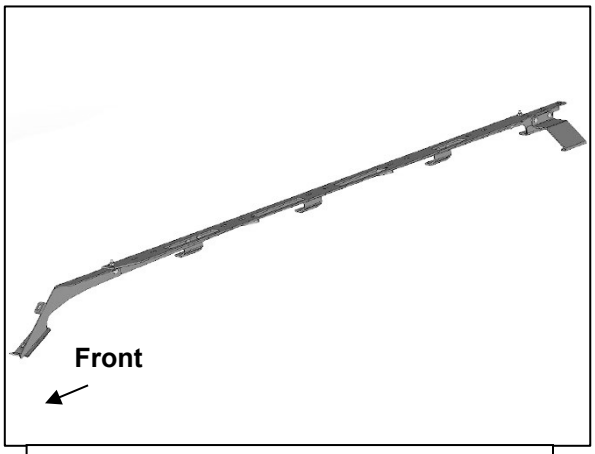

(Fig 10) Driver/left Side Rail assembled

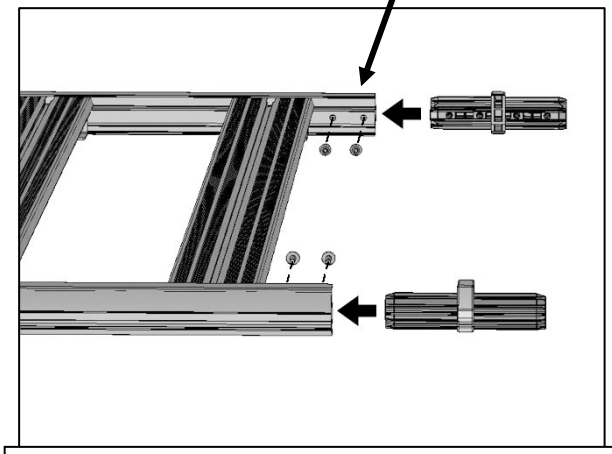

(Fig 11) Insert Connectors into Panel Assembly

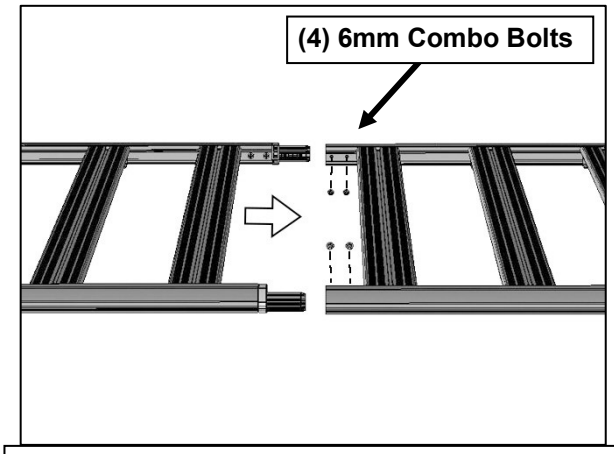

(Fig 12) Slide Panel Assembly over Connectors

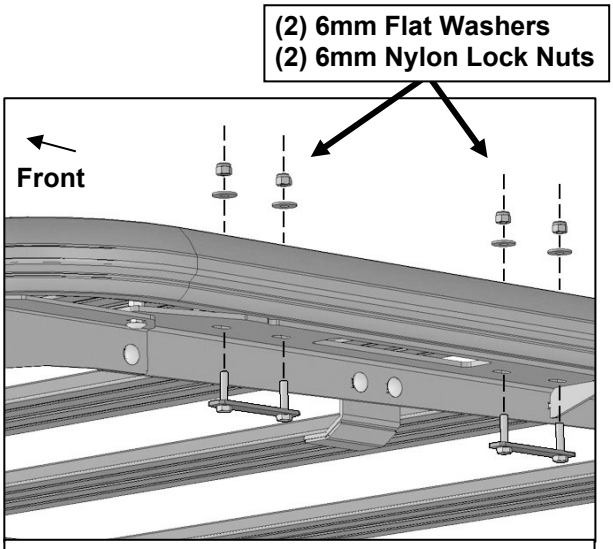

(Fig 13) Insert Double Bolt Plates up through holes in Side Rails. Attach Platform to Bolt Plates (front and #2 locations illustrated)

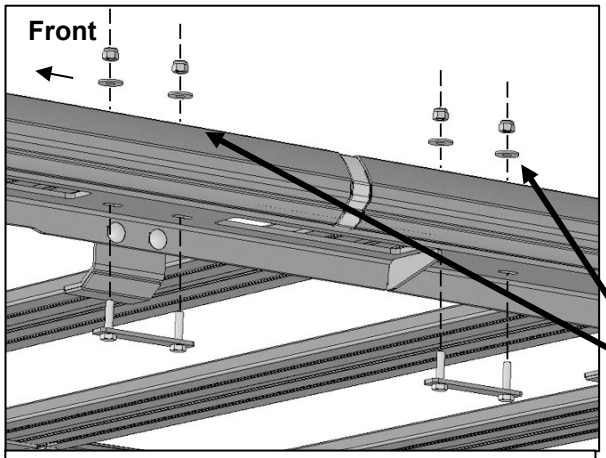

(2) 6mm Flat Washers
(2) 6mm Nylon Lock Nuts

(Fig 14) Insert Double Bolt Plates up through holes in Side Rails. Attach Platform to Bolt Plates (#3 and #4 locations illustrated)

Driver/left Side Installation Pictured

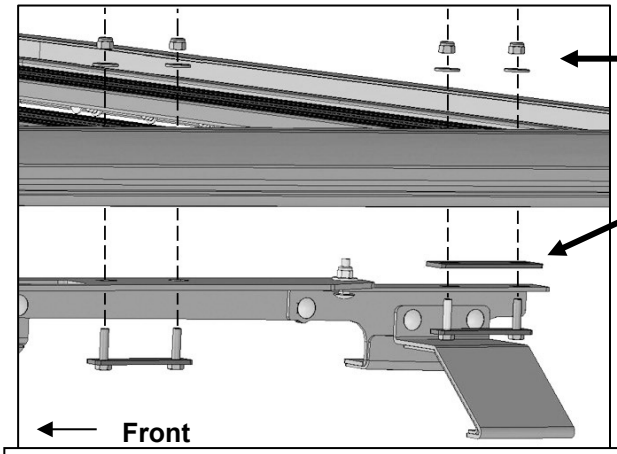

(Fig 15) Insert Spacer Plate between Platform and Rear Side Rail. Insert Double Bolt Plate up through Side Rail, Spacer and into Platform

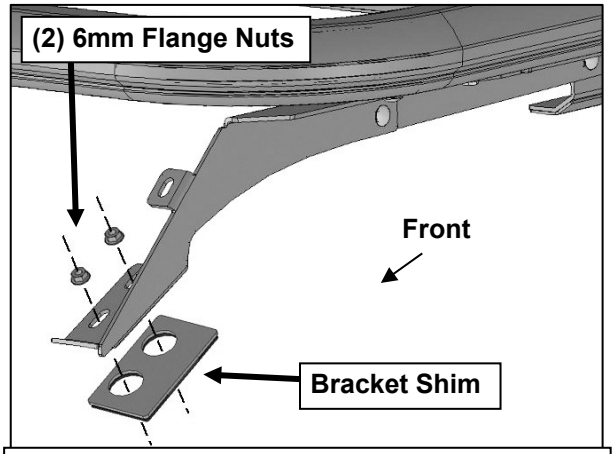

(Fig 16) Carefully place Platform assembly onto vehicle. Attach front mounts to threaded studs and Shims above front windshield

(Fig 17) Attach front mounts to threaded studs and Shims above front windshield

(Fig 18) Hook Outer Clamp Bracket into slot above rear side windows

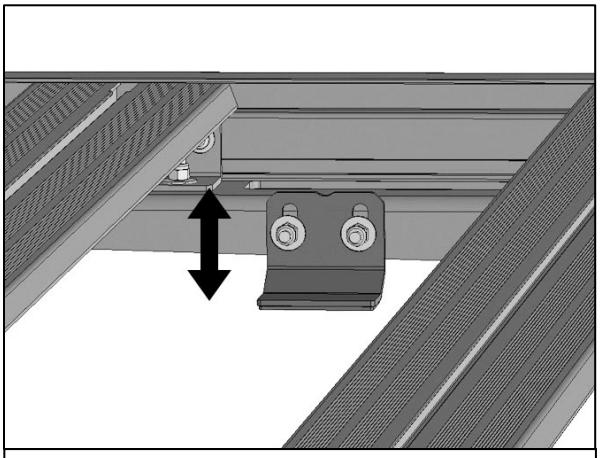

(Fig 19) Adjust Support Brackets up or down to press against top of roof to level Platform

Driver/left Side Installation Pictured

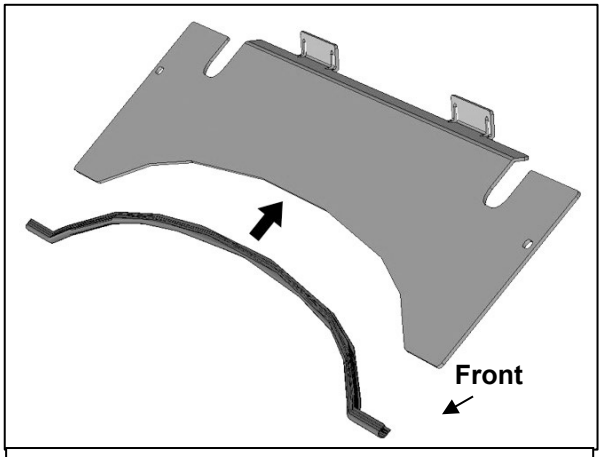

(Fig 20) Press Edge Trim onto Wind Fairing

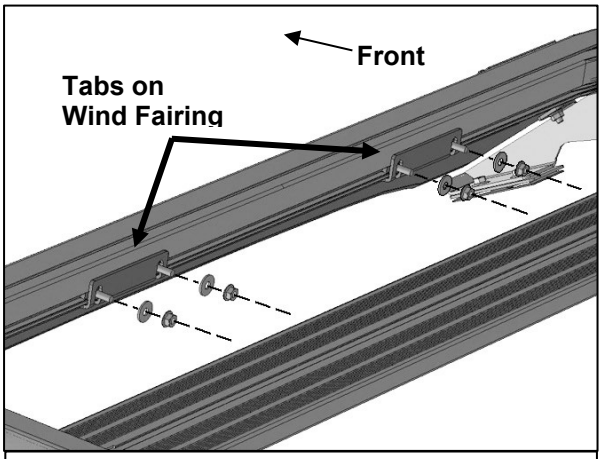

(Fig 21) Reuse preinstalled hardware to attach mounting tabs on top of Wind Fairing to inside and back of Platform assembly

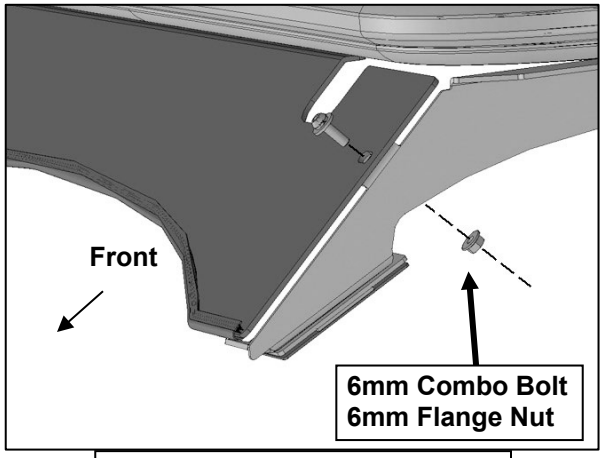

(Fig 22) Attach sides of Fairing to tabs on top of Front Rails

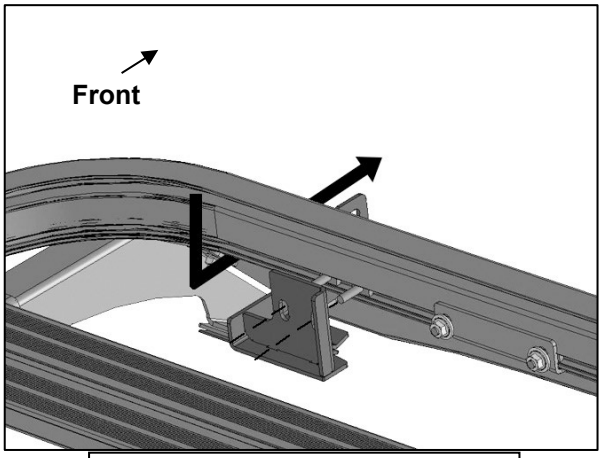

(Fig 23) Insert driver/left Light Bracket through back of Fairing

Driver/left Side Installation Pictured

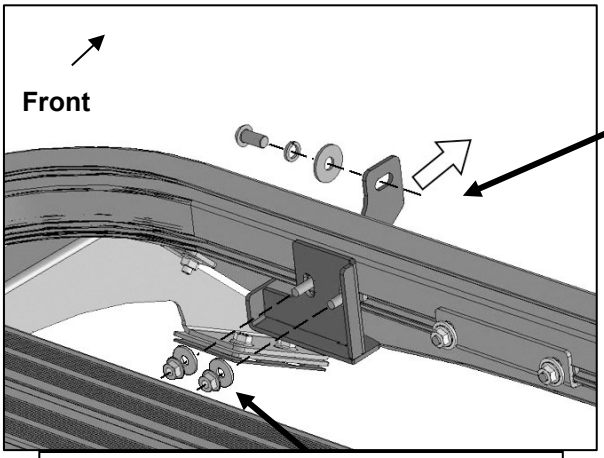

8mm x 16mm Button Head Bolt
8mm Lock Washer
8mm Flat Washers

(Fig 24) Reuse preinstalled hardware to attach Light Bracket to inside and back of Platform assembly

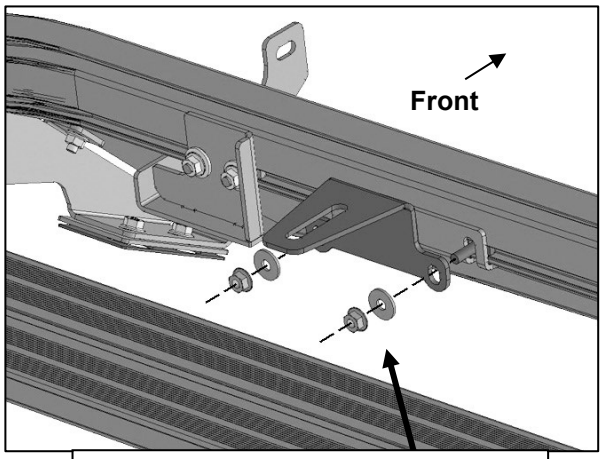

(Fig 25) Reuse hardware to attach Accessory/Light Bracket to back of Fairing (installation optional)

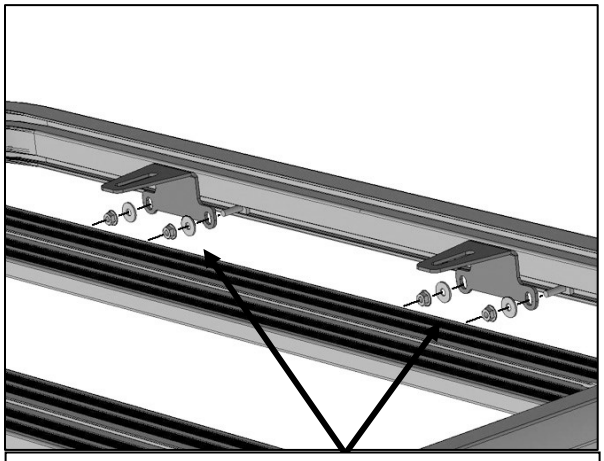

(Fig 26) Reuse preinstalled hardware to attach Light Brackets to inside and back of rear Platform assembly (installation optional)

Complete Installation