INSTALLATION INSTRUCTIONS

FB1 TUBULAR REAR BUMPER
2021 FORD BRONCO
FB14611/FB14612

SCAN TO SEE

INSTALL VIDEO

PARTS LIST: FB14611 FB14612

1	Rear Bumper Assembly	2	12-1.5mm Lug Nuts (For license plate)
1	Driver/left Top Fill Panel	2	12-1.5mm x 30mm Fine Thread Hex Bolts
1	Passenger/right Top Fill Panel	2	12mm x 24mm x 2.5mm Flat Washers
1	Driver/left Mesh Fill Panel	4	12-1.75mm x 45mm Hex Bolts
1	Passenger/right Mesh Fill Panel	4	12mm x 32mm x 3mm Flat Washers
1	Driver/left Double Nut Plate	6	12mm Lock Washers
1	Passenger/right Double Nut Plate	4	10-1.5mm x 35mm Hex Bolts
4	Sensor Retaining Caps	4	10mm x 20mm x 2mm Flat Washers
4	20mm x 10mm Foam Spacers	4	10mm Lock Washers
4	15.5mm x 25mm x 2mm Foam Washer	10	6mm x 20mm Button Head Combo Bolts
4	Plastic Sensor Hole Plugs	4	6mm Flange Nuts
1	Sensor Wire Harness Extension (short)	8	4mm Self Tapping Screws
1	License Plate Relocation Bracket	1	4mm Wrench
2	Plastic License Plate Plugs	10	Nylon Wire Ties
1	License Light Harness Extension (126” long)		

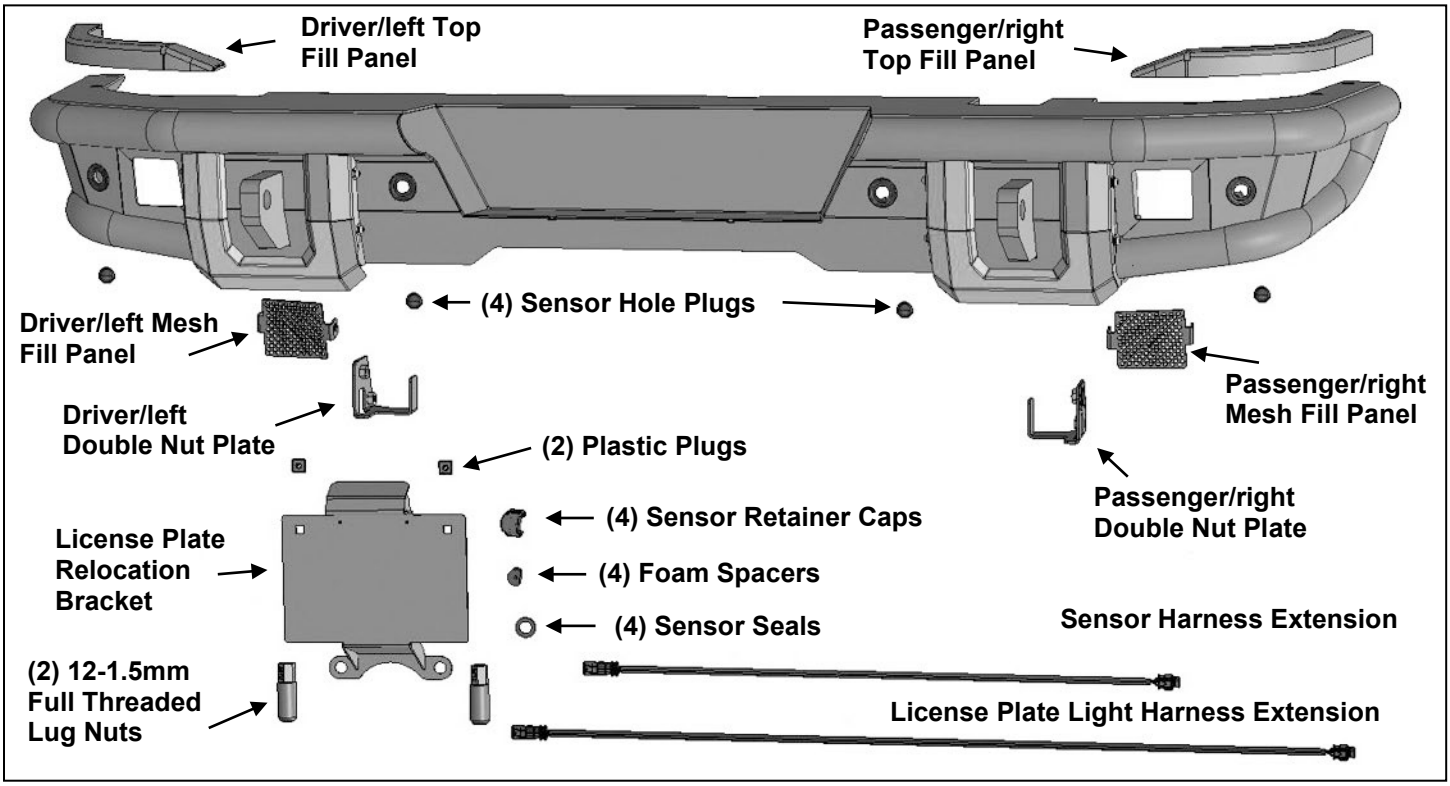

PROCEDURE:

REMOVE CONTENTS FROM BOX AND VERIFY ALL PARTS ARE PRESENT. READ INSTRUCTIONS CAREFULLY. ASSISTANCE IS RECOMMENDED.

1. Start installation from under the driver/left rear of the vehicle. Unplug the wiring harness leading to the bumper, **(Figure 1).** Repeat this Step to unplug the harness on the passenger/right side of the bumper.
2. Remove the factory hex bolts attaching the bumper assembly to the side of the body mounts and the bottom of the frame and tow hooks, **(Figures 2 & 3)**. **NOTE**: Use assistance to hold the bumper in place while removing the mounting bolts.
3. Disassemble the bumper to remove the license plate lights, wiring harness and sensors if equipped, **(Figure 4)**. Note the location of all sensors for proper reinstallation.
4. Determine if vehicle is equipped with parking sensors.
   Models without parking sensors:

   a. From the front of the bumper, push the included Plastic Plugs into the Sensor Mounts, **(Figure 5)**.

   Models with parking sensors:

   a. Select the driver/left side outer sensor.
   b. Remove the silicone seal from the end of the sensor, **(Figure 6)**. Slide the included larger Sensor Seal over front of sensor.
   c. Insert sensor with Seal into sensor mount on back of Bumper, **(Figure 7)**.
   d. Place Foam Spacer over end of sensor. Push Sensor Retaining Cap onto sensor mount and lock into mounting holes, **(Figure 7)**.
   e. Repeat previous Steps to install remaining sensors.
   f. Install the factory wiring harness and plug into sensors, **(Figure 8)**. Use the included Sensor Wiring Harness Extension to extend the reach to sensor as required. Attach harness to back of Bumper.

5. Determine if Mesh Fill Panels or cube style accessory lights will be installed. **NOTE**: Lights not included.

   Mesh Fill Panel installation, do not install lights with Fill Panels:

   a. Select driver/left Fill Panel. Attach Fill Panel to tabs on back of Bumper with the included (2) 6mm Button Head Combo Bolts and (2) 6mm Flange Nuts, **(Figure 9)**. Repeat this **Step** to attach the passenger/right Fill Panel.

   Light installation (do not install Mesh Fill Panels):

   a. Attach lights to tabs at top of square openings in Bumper, **(Figure 9)**.

6. Select the driver/left Top Fille Panel. Attach the Fill Panel to the top of the Bumper with the included (3) 6mm Combo Bolts, **(Figure 10)**. Repeat this **Step** to attach the passenger/right Top Fill Panel.

7. Select the driver/left side Double Nut Plate, **(Figure 11)**. Insert the Nut Plate into the open end of the frame. Line up the threaded holes on the Nut Plate with the holes in the side of the frame, **(Figure 12)**. Repeat this Step to insert the passenger/right Double Nut Plate.

8. With assistance, hold the Bumper assembly up to the end of the frame. Attach the Bumper to the side of the frame and Nut Plate with the included (2) 10mm x 35mm Hex Bolts, (2) 10mm Lock Washers and (2) 10mm Flat Washers, **(Figure 13)**. Attach the Bumper to the bottom of the frame with the included (2) 12mm x 45mm Hex Bolts, (2) 12mm Lock Washers and (2) 12mm x 32mm Large Flat Washers, **(Figure 14)**. **NOTE**: Attach Bumper to the bottom of the frame, between the tow hook and the frame. Repeat this **Step** to attach the passenger/right side of the Bumper.

9. Center the Bumper to the vehicle and fully tighten all hardware.

10. Plug the Bumper wiring harness into the main vehicle harness.

11. Pull out the end of the bumper harness that plugs into the license plate light, **(Figure 15)**. Plug the long License Plate Harness Extension into the bumper harness.

12. Open the rear door on the vehicle, **(Figure 16)**. Run the License Plate Harness up from the back of the Bumper and over the door seal.

13. Remove the covers from the rear door, **(Figure 17)**. Run the Harness up to the factory wiring harness and through the rear door. Push the harness through the rubber grommet in the door. **NOTE**: It may be necessary to cut, modify and reseal the rubber plug.

14. Select the License Plate Relocation Bracket, **(Figure 18)**. Snap the license plate light into the opening in the Bracket.

15. Remove the (2) factory lug nuts from the spare tire. Use the included Full Threaded Lug Nuts to attach the spare, **(Figures 18 & 19)**. Attach the License Plate Bracket to the Lug Nuts with (2) 12-1.5mm x 30mm **Fine Thread** Hex Bolts, (2) 12mm Lock Washers and (2) 12mm x 24mm Small Flat Washers. Plug harness into license plate lights, **(Figures 18 & 19)**.

16. Feed the wiring harness through the spare tire and plug into the license plate light, **(Figure 20)**. Use the included Wire Ties to attach the Harness to the factory harness, **(Figure 16)**.

17. Snap the included (2) Plastic Plugs into the square holes in the License Plate Bracket, **(Figure 18)**. Reuse the factory screws to attach the license plate to the Plugs.

18. Do periodic inspections to the installation to make sure that all hardware is secure and tight.

To protect your investment, do not use any type of polish or wax that may contain abrasives that could damage the finish. Mild soap may be used to clean the Bumper.

Driver/left Side Installation Pictured

(Fig 1) Unplug all wiring harnesses leading to the rear bumper, (arrow-driver/left side pictured after bumper removal)

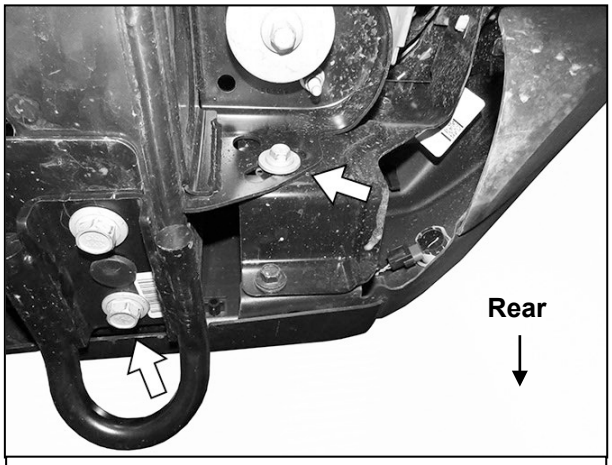

(Fig 2) Remove hex bolts attaching driver/left side bumper brackets to bottom of frame and side of body mount (arrows)

(Fig 3) Remove bumper assembly

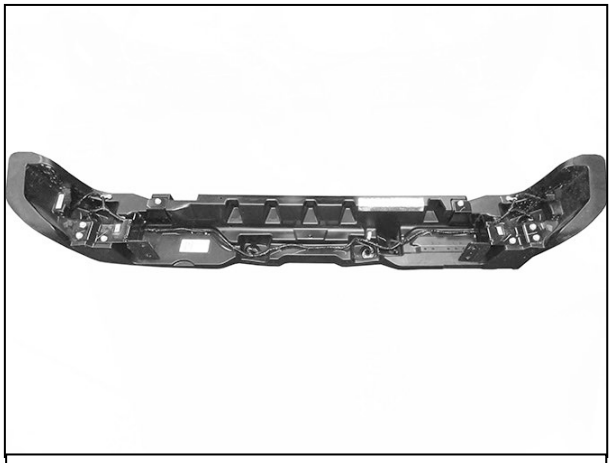

(Fig 4) Disassemble bumper assembly to remove license plate lights, wiring harness and parking sensors as equipped

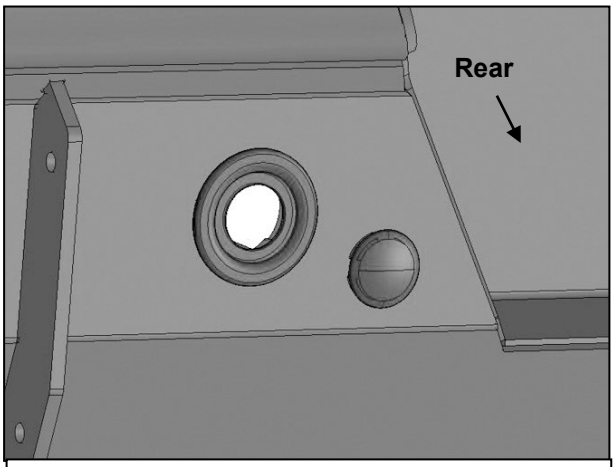

(Fig 5) Models without parking sensors, push the included Plugs into sensor mounts

Driver/left Side Installation Pictured

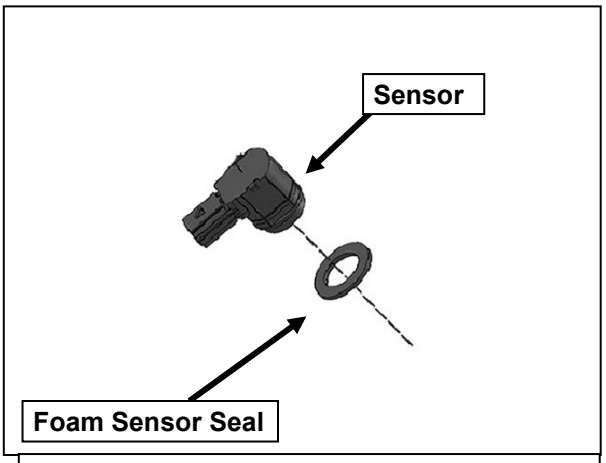

(Fig 6) Remove factory seal from end of sensor. Push Foam Seal onto end of sensor

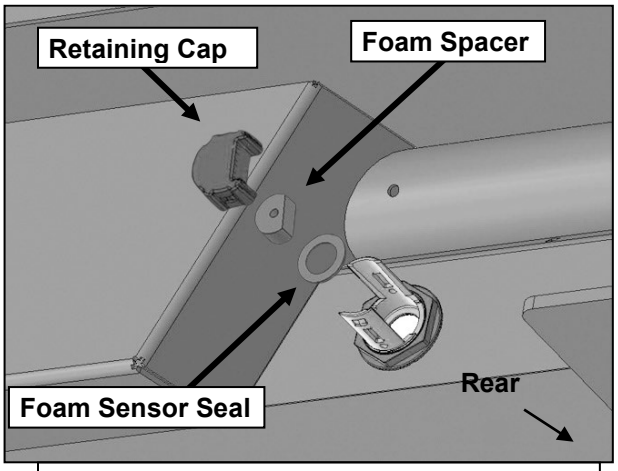

(Fig 7) Push sensor and Seal into back of Mount. Place Foam Spacer over sensor. Snap Retaining Cap onto sensor mount

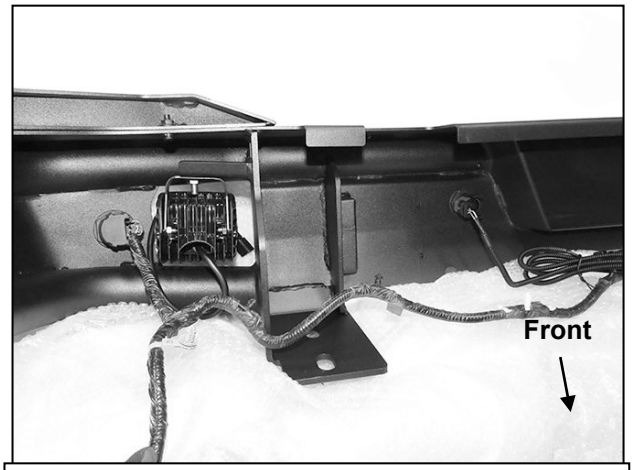

(Fig 8) Attach factory wiring harness to Bumper. Plug harness into sensors if equipped

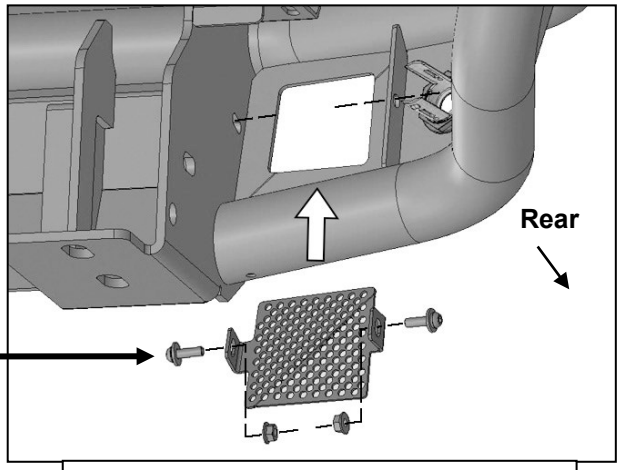

(Fig 9) Attach cube light (not included) or driver/left Mesh Fill Panel

Driver/left Side Installation Pictured

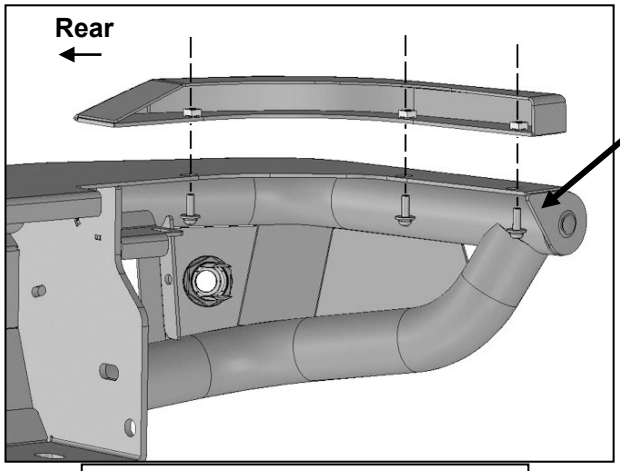

(3) 6mm Combo Screws

(Fig 10) Attach driver/left Top Fill Panel to top of Bumper (arrows)

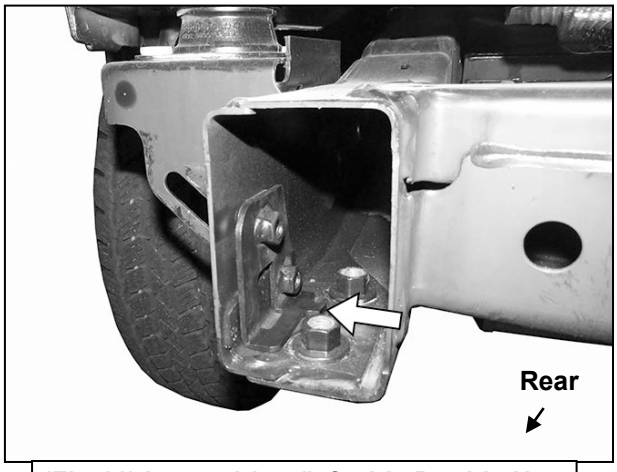

(Fig 11) Insert driver/left side Double Nut Plate into open end of frame (arrow)

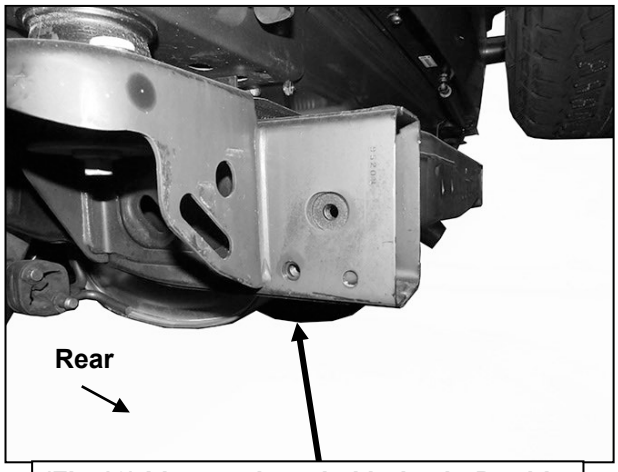

(Fig 12) Line up threaded holes in Double Nut Plate with holes in side of frame

(2) 10mm x 35mm Hex Bolts
(2) 10mm Lock Washers
(2) 10mm Flat Washers

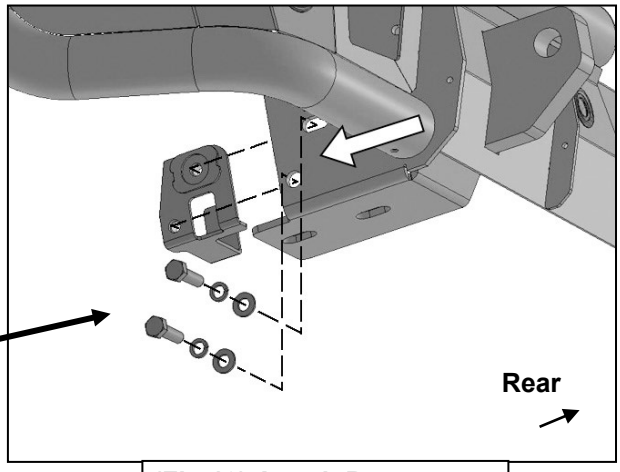

(Fig 13) Attach Bumper to Double Nut Plate in frame

Driver/left Side Installation Pictured

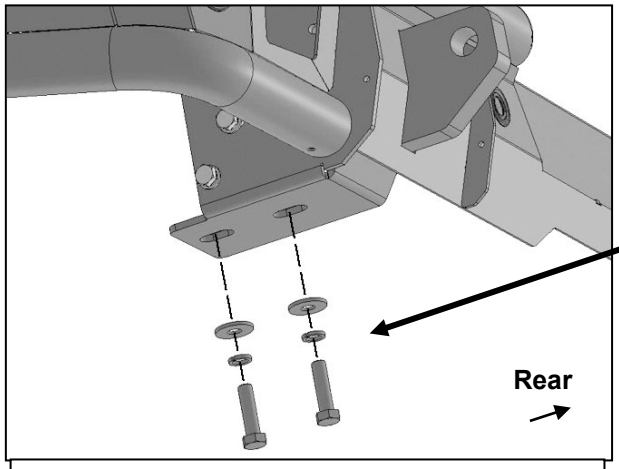

(Fig 14) Attach Bumper to bottom of frame. Attach tow hook over Bumper Bracket

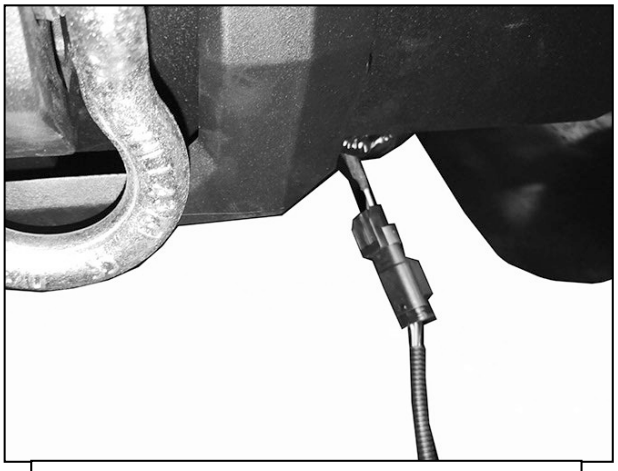

(Fig 15) Plug the long License Plate Light Harness into the factory wiring harness on the Bumper for the license plate light

(Fig 16) Run the License Plate Harness over the door seal and up to the factory harness.

(Fig 17) Remove the plastic covers from the rear door. Feed Light Harness along the factory harness and out through the rubber plug in the door (arrows).

Driver/left Side Installation Pictured

Snap factory license plate light into Relocation Bracket. Push Plastic Plugs into Bracket for license plate

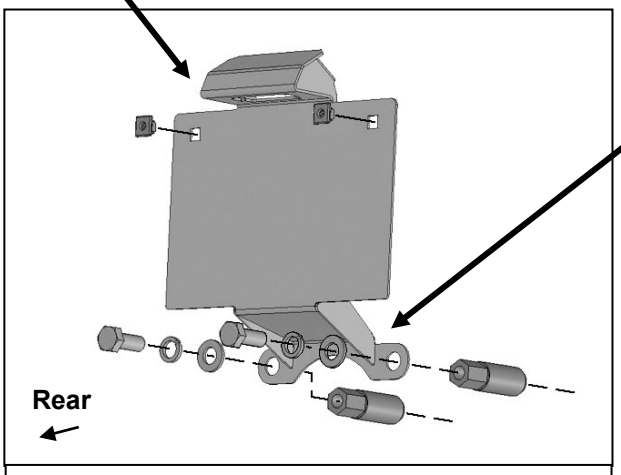

(2) 12-1.5mm x 30mm Fine Thread Hex Bolts
(2) 12mm Lock Washers
(2) 12mm Small Flat Washers

(Fig 18) Remove the (2) upper factory lug nuts from the spare tire (also see Fig 19). Use the included full thread Lug Nuts to attach spare tire. Attach Relocation Bracket to Full Thread Lug Nuts

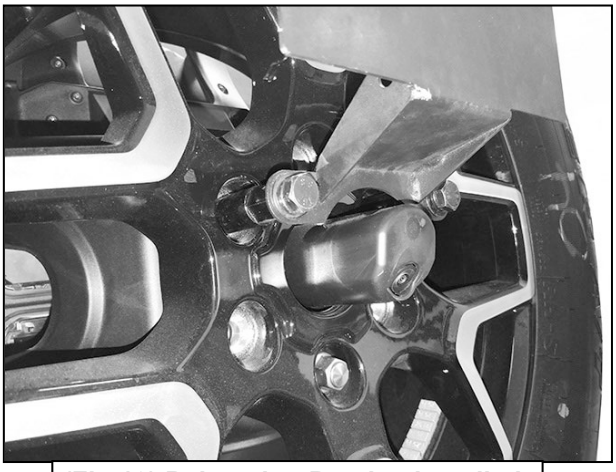

(Fig 19) Relocation Bracket installed

(Fig 20) Plug Harness into license plate light