INSTALLATION INSTRUCTIONS

HD TUBULAR WINCH FRONT BUMPER
2021-26 BRONCO
FB14581 / FB14585

SCAN TO SEE

INSTALL VIDEO

PARTS LIST:

1	HD Bumper	2	12mm x 60mm Double Bolt Plates
1	Bull Nose Hoop	2	12mm x 60mm Single Bolt Plates
1	Winch Tray Shackle Mount Assem.	8	12mm x 32mm x 3 mm Flat Washers
1	Driver/left Inner Support Bracket	8	12mm Lock Washers
1	Passenger/Right Inner Support Bracket	8	12-1.75mm Hex Nuts
1	Driver/left Outer Support Bracket	2	10-1.5mm x 110mm Hex Bolts
1	Passenger/Right Outer Support Bracket	4	10mm x 30mm x 2.5 mm Flat Washers
2	“U” Cover Plates	2	10mm Lock Washers
1	Driver/left Mesh Fill Panel	2	10-1.5mm Hex Nuts
1	Passenger/right Mesh Fill Panel	4	8-1.25mm x 25mm Button Head Bolts
1	Driver/left LED “L” Upper Bracket	4	8-1.25mm x 25mm Hex Bolts
1	Passenger/Right LED “L” Upper Bracket	2	8-1.25mm x 16mm Hex Bolts
1	Driver/left LED “L” Lower Bracket	18	8mm x 24mm x 2mm Flat Washers
1	Passenger/Right LED “L” Lower Bracket	10	8mm Lock Washers
1	ACC Plastic Cover	8	8mm Hex Nuts
1	ACC Assem to Bumper Bracket	7	6-1.0mm x 25mm Button Head Bolts
1	ACC Mounting Bracket	14	6-1.0mm x 20mm Combo Bolts
1	License Plate Bracket	10	6mm x 18mm x 1.6mm Flat Washers
2	Plastic Plugs for License Plate	7	6mm Lock Washers
6	Sensor Retaining Caps	7	6mm Hex Nuts
6	20mm x 10mm Foam Spacers	4	6mm Flange Nuts
6	15.5mm x 25mm x 2mm Foam Washer	12	4mm Self Tapping Screws
6	Plastic Sensor Hole Plugs	1	5mm Wrench
2	Wire Harness Extensions	1	4mm Wrench
6	12mm Plastic Retainers	10	Nylon Wire Ties

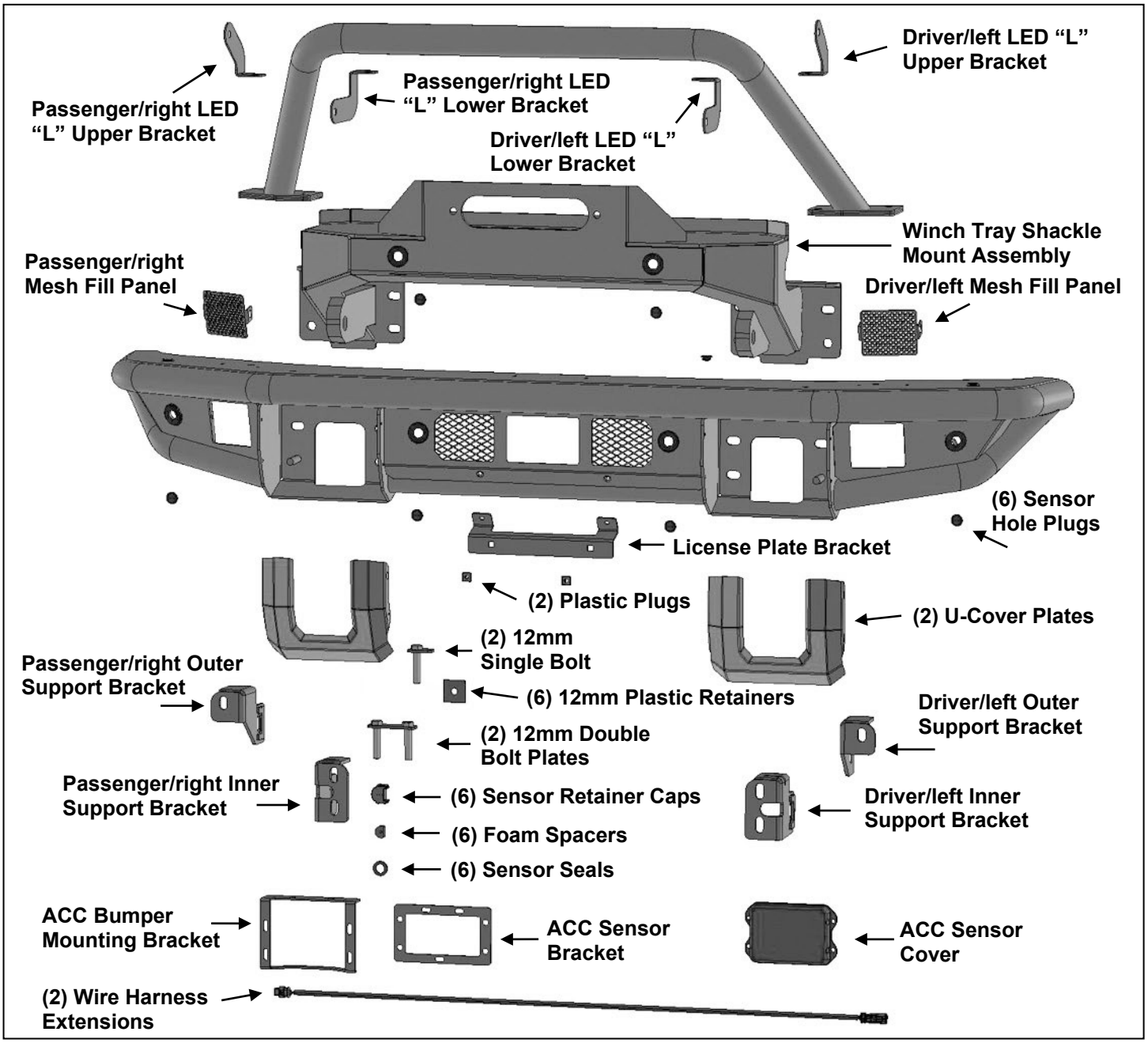

PROCEDURE:

REMOVE CONTENTS FROM BOX AND VERIFY ALL PARTS ARE PRESENT. READ INSTRUCTIONS CAREFULLY. ASSISTANCE IS HIGHLY RECOMMENDED.

1. Start installation from under the front of the vehicle and remove the splash guard, **(Figure 1)**.
2. Determine if the vehicle is equipped with plastic bumper cover or steel option bumper.
   Models with plastic bumper cover:
   a. Remove the plastic covers from the front of the bumper, **(Figures 1 & 2)**.
   Models with optional steel bumper:
   a. Remove the covers surrounding the tow hooks, **(Figure 3)**.
3. Unplug the wiring harness leading to the front bumper. **NOTE**: Harness plug is located behind the driver/left side of the bumper below the headlight, **(Figure 3).**
4. From the front, remove the factory hex bolts attaching the bumper assembly to the end of the frame, **(Figures 2—4)**. **NOTE**: Use assistance to hold the bumper in place while removing the mounting bolts.

5. On models with plastic bumper only, remove the seals around the lower tow hooks.
6. Temporarily unplug and remove the shutter assembly, **(Figure 4—6)**.
   Models with ACC (adaptive cruise control) sensor.
   a. Remove the sensor from the front of the shutter assembly, **(Figure 5)**.
   b. Release the wiring harness from the clips on the back of the shutter assembly, **(Figure 6)**.
   c. Reroute the ACC plug end of the harness down through the hole in the top of the shutter assembly and out through the front, **(Figure 7)**.
7. Remove the plastic nuts attaching the triple nut plate to the back of the driver/left bumper mounting flange on the end of the frame, **(Figure 8)**. Remove the triple nut plate.
8. Select the driver/left inner and outer Support Brackets, **(Figure 9)**. Attach the Support Brackets to the sides of the frame with the included (1) 10mm x 110mm Hex Bolt, (2) 10mm Flat Washers, (1) 10mm Lock Washer and (1) 10mm Hex Nut, **(Figures 9 & 10)**. Push Support Brackets up against back of flange on frame, **(Figure 10)**.
9. Repeat **Steps 7 & 8** to attach the passenger/right Inner and Outer Support Brackets.
10. Reattach the shutter assembly to the vehicle.
11. Determine if the vehicle is equipped with ACC sensor (Adaptive Cruise Control), and parking sensors.
    Models with ACC sensor:
    a. Gently pull the end of the harness out from the shutter assembly, **(Figure 11)**. Do not pull out the harness, only extend the plug end of the harness.
    b. Select the rectangular Sensor Mounting Bracket, **(Figure 12)**. Attach the ACC sensor to the Bracket with the included (3) 6mm x 20mm Button Head Bolts, (6) 6mm Flat Washers, (3) 6mm Lock Washers and (3) 6mm Hex Nuts, **(Figure 13)**.
    c. Attach the Plastic Cover to the front and the ACC sensor and Bracket to the <u>back</u> of the Bumper Mounting Bracket with the included (4) 6mm x 20mm Button Head Bolts, (4) 6mm Flat Washers, (4) 6mm Lock Washers and (4) 6mm Hex Nuts, **(Figure 14)**.
    d. Carefully unwrap the Bumper.
    e. Attach the ACC sensor and Bracket assembly to the tab on the back of the FB1 HD Bumper with the included (2) 8mm x 25mm Hex Bolts, (4) 8mm Flat Washers, (2) 8mm Lock Washers and (2) 8mm Hex Buts, **(Figures 15 & 16)**. Push assembly forward, center it in the opening in the Bumper and fully tighten hardware.
    Models without parking sensors:
    a. From the front of the bumper, push the included (6) Plastic Plugs into the Sensor Mounts on the HD Bumper and the front of the Winch Tray, **(Figure 17)**.
    Models with parking sensors:
    a. Remove sensors and wiring harness from the factory bumper. Note the location of each sensor for proper reinstallation.
    b. Remove the silicone seal from the end of the sensor. Slide the included larger Sensor Seal over front of sensor, **(Figure 18)**.
    c. Insert sensor with Seal into the outer sensor mount on the back of the Bumper, **(Figure 19)**.
    d. Place Foam Spacer over end of sensor. Push Sensor Retaining Cap onto sensor mount and lock into mounting holes, **(Figure 19)**.
    e. Repeat previous Steps to install remaining outer sensor in Bumper and (2) center sensors on the Winch Tray Assembly.
12. Determine if Mesh Fill Panels or cube style accessory lights will be installed. **NOTE**: Lights not included.
    Mesh Fill Panel installation, do not install lights with Fill Panels:
    a. Select driver/left Fill Panel. Attach Fill Panel to tabs on back of Bumper with the included (2) 6mm Button Head Combo Bolts and (2) 6mm Flange Nuts, **(Figure 20)**. Repeat this **Step** to attach the passenger/right Fill Panel.
    Light installation (do not install Mesh Fill Panels):
    a. Attach lights to tabs at top of square openings in Bumper, **(Figure 20)**.
13. Attach the Top Hoop to the top of the Bumper with the included (4) 8mm x 25mm Button Head Bolts, (8) 8mm Flat Washers, (4) 8mm Lock Washers and (4) 8mm Hex Nuts, **(Figure 21)**. **NOTE**: Installation is optional but Hoop must be installed before Bumper is attached to vehicle. Fully tighten Hoop hardware.

14. Select the Winch Tray Shackle Mount Assembly. Attach the assembly to the 12mm Threaded Studs in the front of the Bumper with (2) 12mm Flat Washers, (2) 12mm Lock Washers and (2) 12mm Hex Nuts, **(Figure 22)**. Tighten the hardware to hold assembly in place.

15. Insert (1) 12mm Single Bolt Plate through the outer mounting hole in the driver/left Mounting Bracket and Bumper, **(Figure 23)**. Thread (1) 12mm Plastic Retainer onto the Bolt Plate to help hold it in place, **(Figure 26)**. Repeat this Step to attach (1) 12mm Double Bolt Plate to the (2) inner mounting holes, **(Figure 24—26)**. **NOTE**: Plastic Retainers are supplied to help with Bumper installation, use is not mandatory.

16. Repeat **Step 15** to install the Bolt Plates on the passenger/right side of the Winch Tray Assembly and Bumper.

17. Models with parking sensors, install the factory wiring harness and plug into outer sensors only. Plug the included (2) Harness Extensions into the center plugs on the harness, **(Figure 26)**. Attach harness to back of Bumper.

18. With assistance, hold the Bumper assembly up to the end of the frame and Support Brackets. Guide the Bolt Plates through the frame and Brackets. Attach the driver/left end of the Bumper to the frame and Brackets with the included (3) 12mm Flat Washers, (3) 12mm Lock Washers and (3) 12mm Hex Nuts, **(Figure 27—29)**. Repeat this **Step** to attach the passenger/right side of the Bumper.

19. Center the Bumper to the vehicle and fully tighten all hardware.

20. Attach the winch and cable guide to the Winch Tray assembly, (winch and cable guide not included).

21. Models with parking sensors, plug the (2) Wiring Harness Extensions into the (2) sensors in the Winch Tray Assembly, **(Figure 30)**.

22. Attach the included U-Cover Plates to the threaded holes in the driver/left side of the Bumper with the included (4) 6mm Button Head Combo Bolts, **(Figures 31 & 32)**. Repeat this **Step** to attach the Cover Plate to the passenger/right side of the Bumper.

23. Determine if bar style LED light will be installed on Hoop. **NOTE**: Check for clearance between light and winch to determine if light will be installed above or below the mounting tabs on the back of the Hoop. **NOTE**: Light not included.
LED Light Installation with Hoop, (LED Light Bar and Hoop installation optional):
   a. Select the Upper or Lower Left and Right “L” Brackets. Attach Brackets to tabs on back of Hoop with the included (2) 8mm x 25mm Hex Bolts, (4) 8mm Flat Washers, (2) 8mm Lock Washers and (2) 8mm Hex Nuts, **(Figure 33)**.
   b. Attach the LED Light Bar to the Brackets with the included (2) 8mm x 16mm Hex Bolts, (2) 8mm Lock Washers and (2) 8mm x 24mm Flat Washers, **(Figure 33)**.

24. Models with front license plate, attach the included License Plate Bracket with (2) 6mm Combo Bolts, **(Figure 34)**. Snap the included (2) Plastic Plugs into the Bracket.

25. Models with ACC sensor, plug wiring harness into sensor.

26. All models, reinstall the lower splash guard.

27. Do periodic inspections to the installation to make sure that all hardware is secure and tight.

To protect your investment, do not use any type of polish or wax that may contain abrasives that could damage the finish. Mild soap may be used to clean the Bumper.

Driver/left Side Installation Pictured

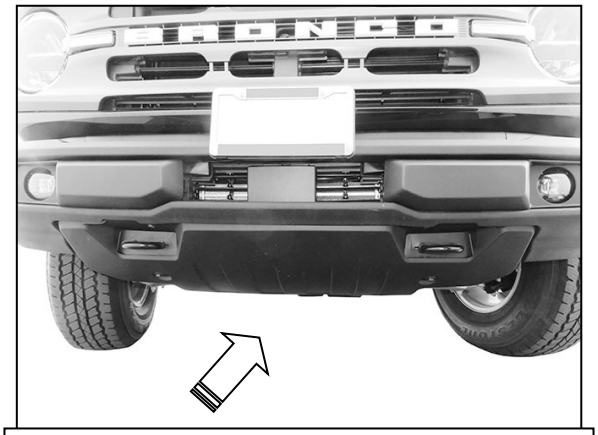

(Fig 1) Remove splash guard (arrow). Model with plastic bumper cover pictured.

(Fig 2) Models with plastic bumper cover (see Fig 1), remove bumper pads from bumper (driver/left side pictured)

Unplug wiring harness leading to the front bumper. Remove hex bolts to remove bumper

(Fig 3) Model with steel bumper, remove cover from bumper (driver/left side pictured)

(Fig 4) Remove factory hex bolts from front to remove bumper assembly

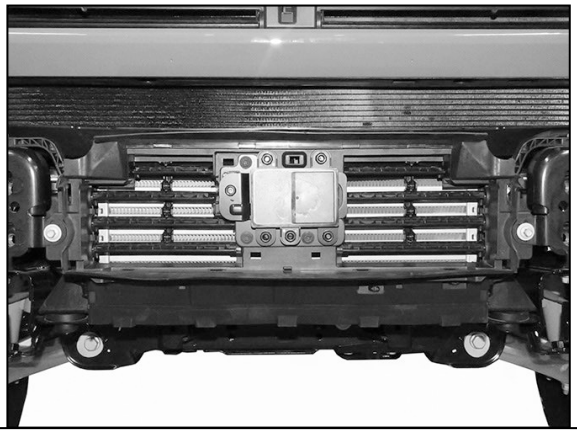

(Fig 5) Remove the shutter assembly. Models with ACC sensor (pictured), unplug and remove sensor from shutter assembly

Driver/left Side Installation Pictured

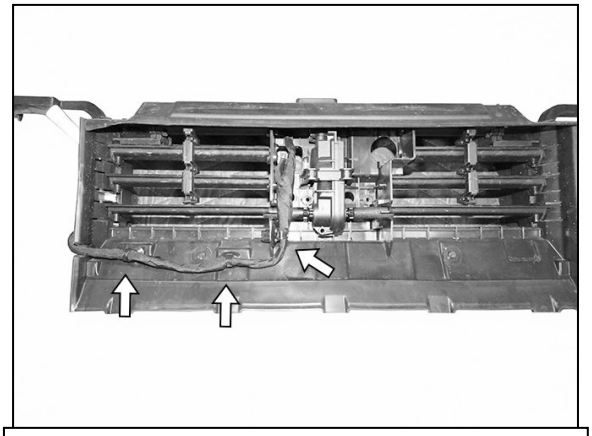

(Fig 6) Models with ACC sensor, remove the wiring harness to the sensor (arrows)

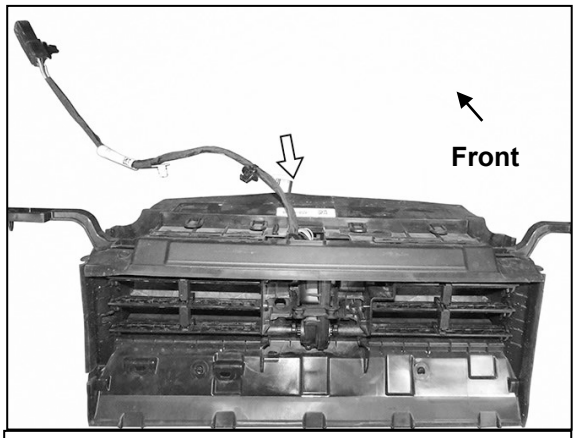

(Fig 7) Models with ACC sensor, insert the ACC plug end down through the hole in the top of the shutter assembly and out through the front (arrow-also see Fig 11)

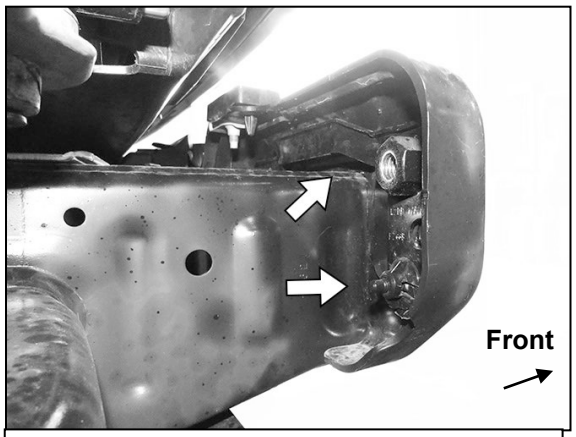

(Fig 8) Remove plastic nuts to remove the triple nut plates (arrows). Passenger/right side pictured

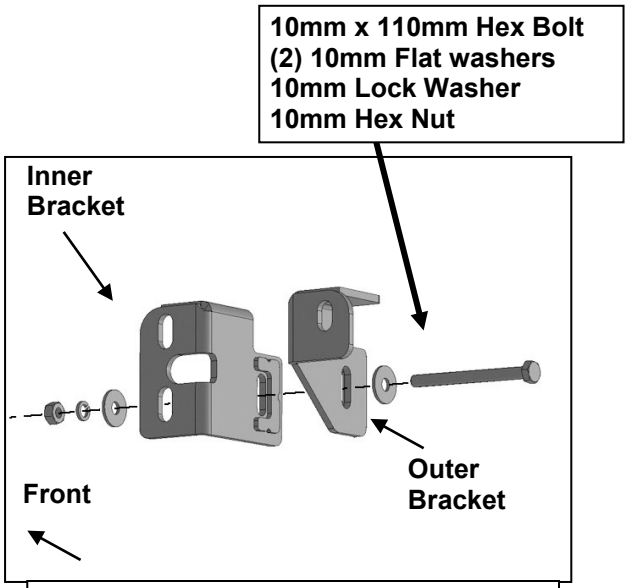

(Fig 9) Attach driver/left Inner and Outer Support Brackets to end of frame

Driver/left Side Installation Pictured

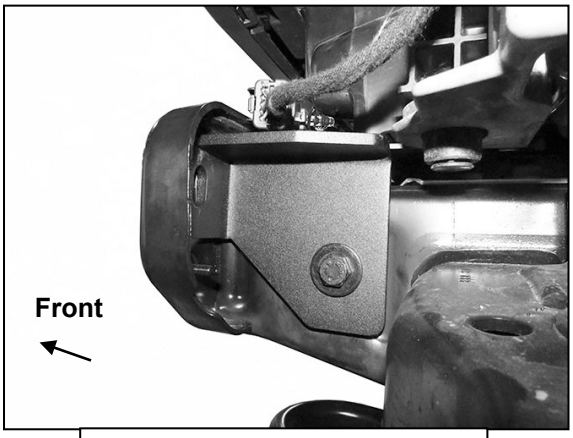

(Fig 10) Driver/left side Outer Support Bracket pictured

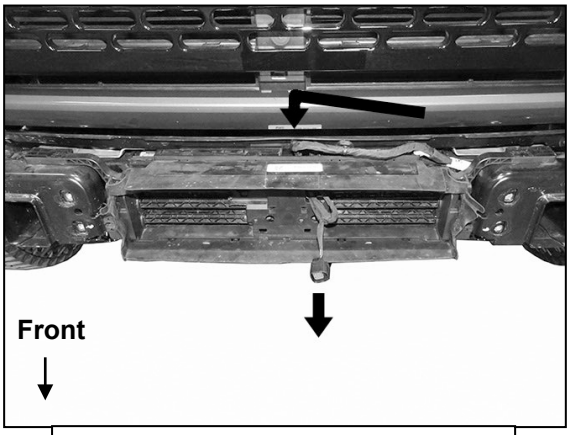

(Fig 11) Gently pull end of harness out through front of shutter assembly until it stops

(3) 6mm x 25mm Button Head Bolts
(6) 6mm Flat Washers
(3) 6mm Lock Washers
(3) 6mm Hex Nuts

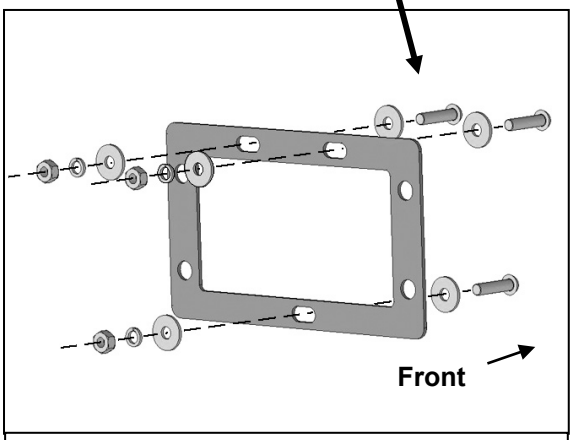

(Fig 12) Models with ACC sensor, attach sensor to back of Mounting Bracket

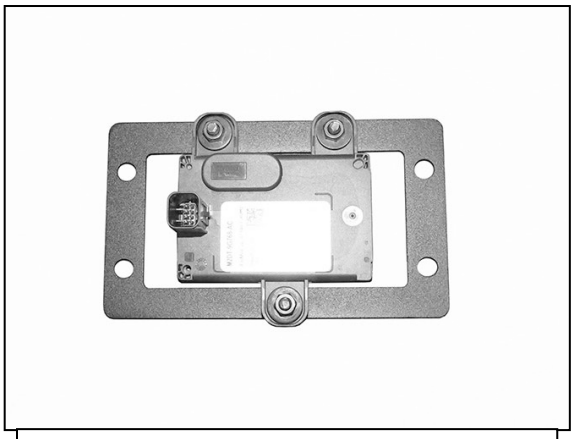

(Fig 13) ACC sensor attached to Bracket

Driver/left Side Installation Pictured

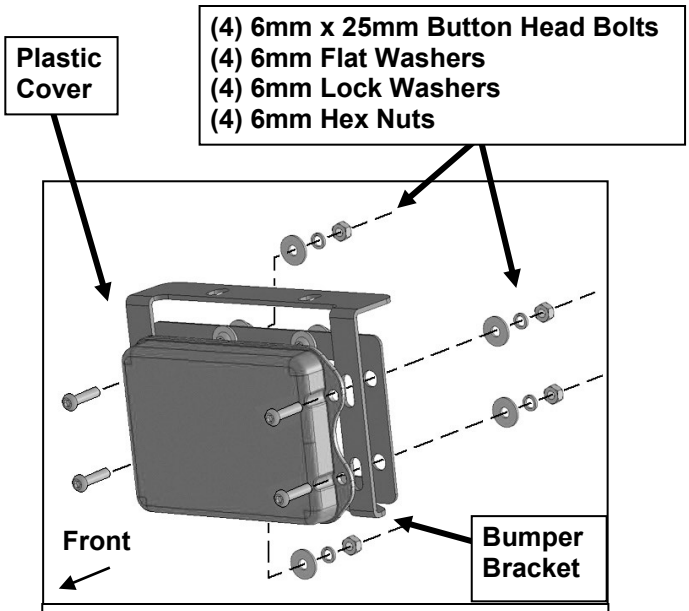

(Fig 14) Model with ACC sensor, attach Plastic Cover to front side of Bumper Bracket and attach sensor and Mounting Bracket to back of Bumper Bracket.

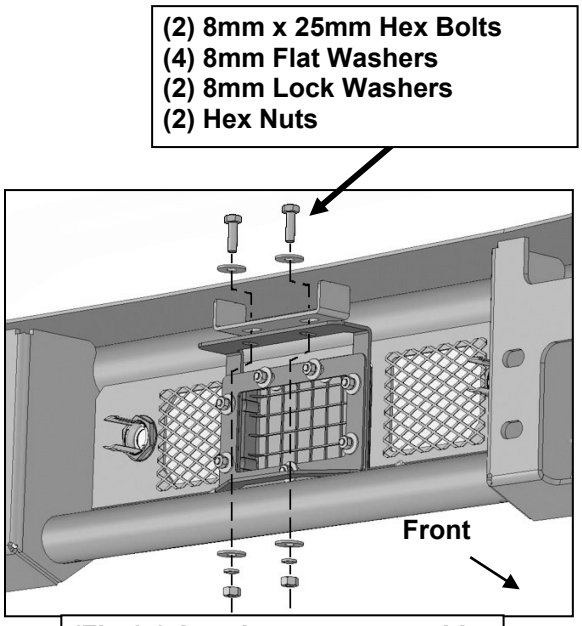

(Fig 15) Attach sensor assembly to tab on back of Bumper

(Fig 16) ACC sensor assembly attached to back of Bumper

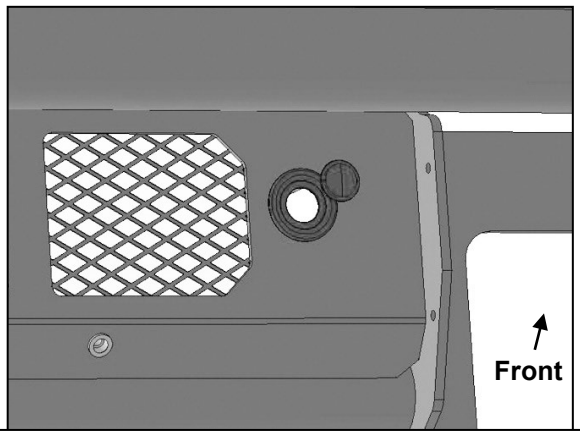

(Fig 17) Models without parking sensors, push the included Plugs into sensor mounts

Driver/left Side Installation Pictured

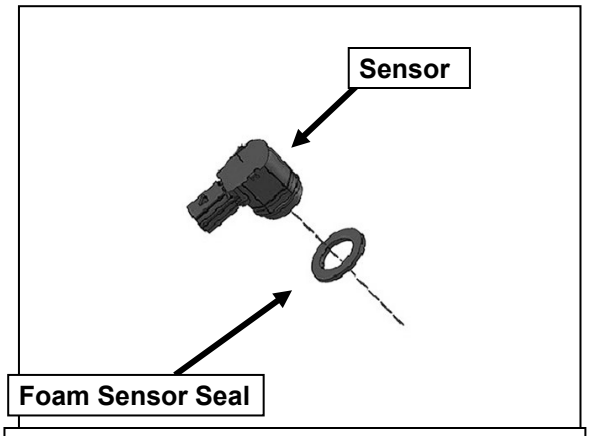

(Fig 18) Remove factory seal from end of sensor. Push Foam Seal onto end of sensor

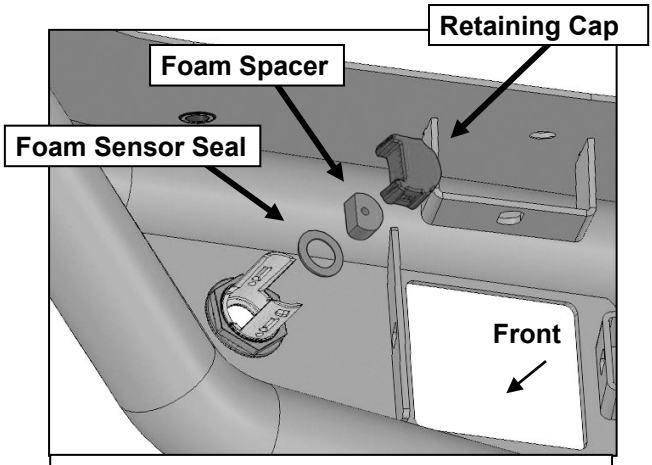

(Fig 19) Push sensor and Seal into back of Mount. Place Foam Spacer over sensor. Snap Retaining Cap onto sensor mount

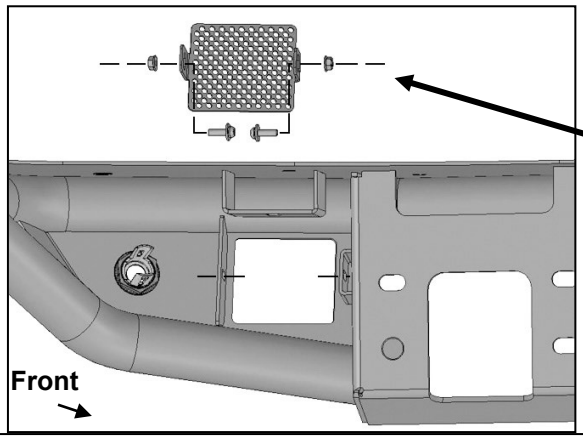

(2) 6mm Combo Bolts
(2) 6mm Flange Nuts

(Fig 20) Attach Mesh Fill Panel or cube light (light not included) to driver/left side of Bumper

(2) 8mm x 25mm Button Head Bolts
(4) 8mm Flat Washers
(2) 8mm Lock Washers
(2) 8mm Hex Nuts

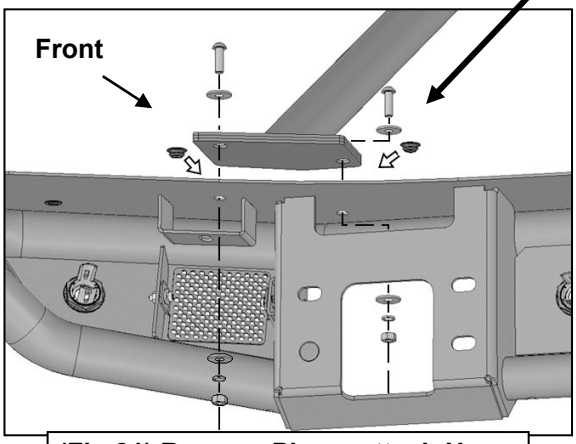

(Fig 21) Remove Plugs, attach Hoop to top of Bumper if desired

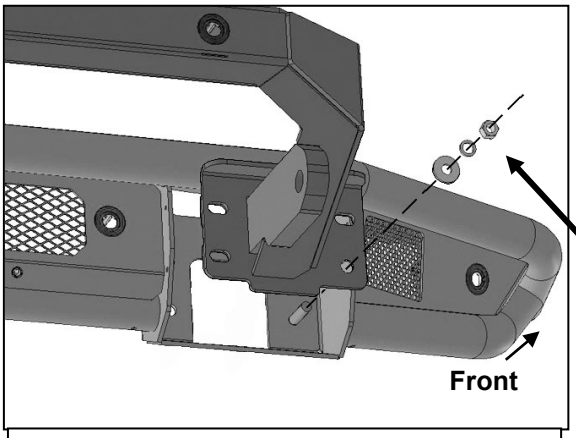

12mm Flat Washer
12mm Lock Washer
12mm Hex Nut

(Fig 22) Attach Winch Tray Shackle Mount to threaded studs on front of Bumper (driver/left side illustrated)

Driver/left Side Installation Pictured

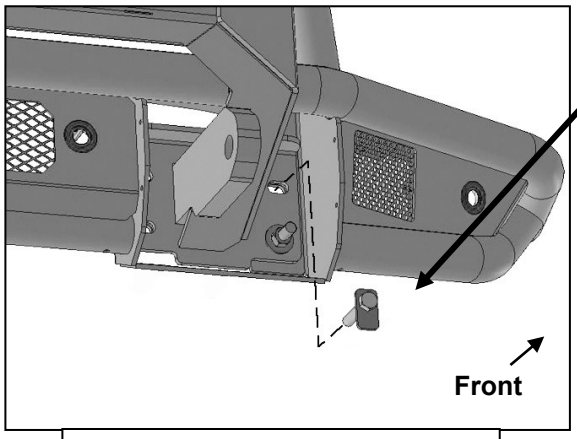

(Fig 23) Insert 12mm Single Bolt Plate into upper slot

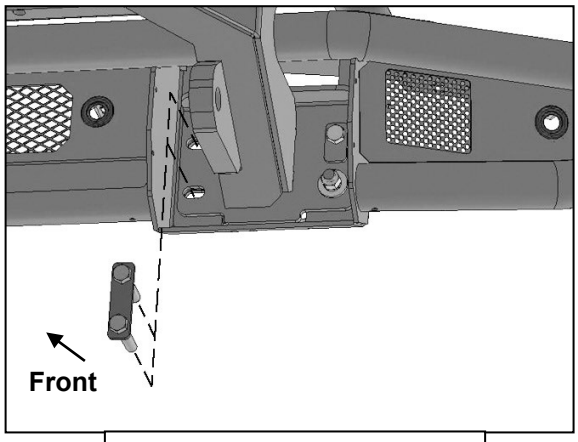

(Fig 24) Insert 12mm Double Bolt Plate into inner slots

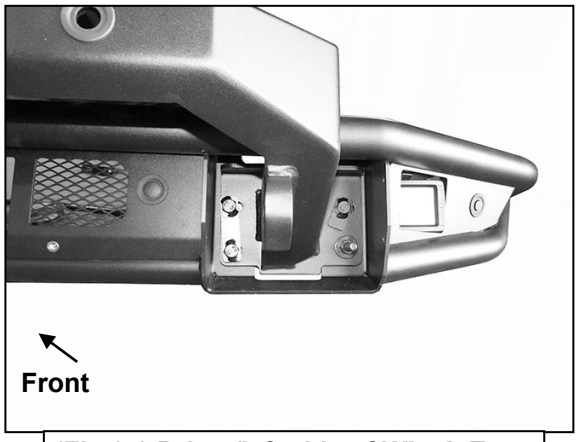

(Fig 25) Driver/left side of Winch Tray assembly attached to Bumper

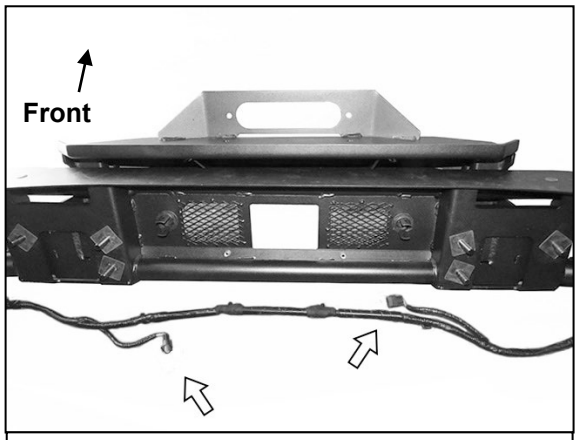

(Fig 26) Thread (3) Plastic Retainers onto Bolt Plates to help hold in place . Models with parking sensors, plug the included (2) Wiring Harness Extensions into the plugs for the center sensors (arrows). Attach wiring harness to back of Bumper

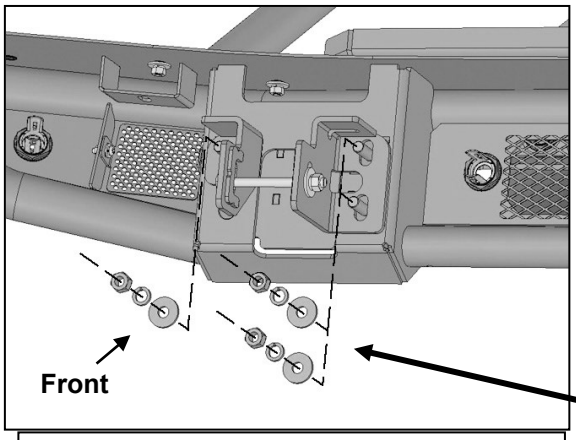

(3) 12mm Flat Washers
(3) 12mm Lock Washers
(3) 12mm Hex Nuts

(Fig 27) Attach driver/left side of Bumper to end of frame and Support Brackets

Driver/left Side Installation Pictured

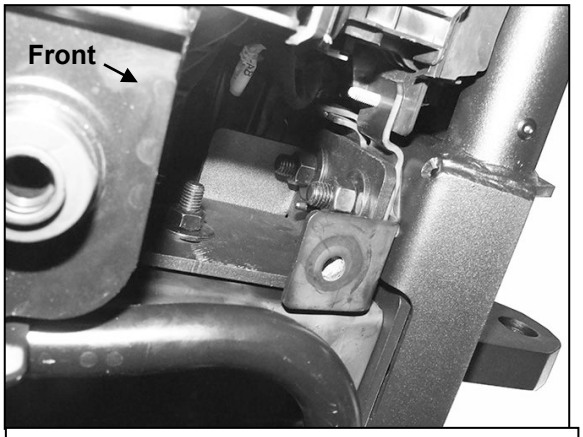

(Fig 28) Driver/left side of Bumper attached to Double Bolt Plate pictured from below

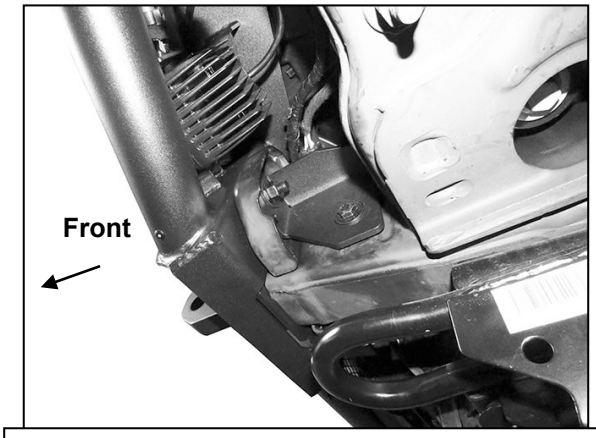

(Fig 29) Driver/left side of Bumper attached to outer Single Bolt Plate pictured from below

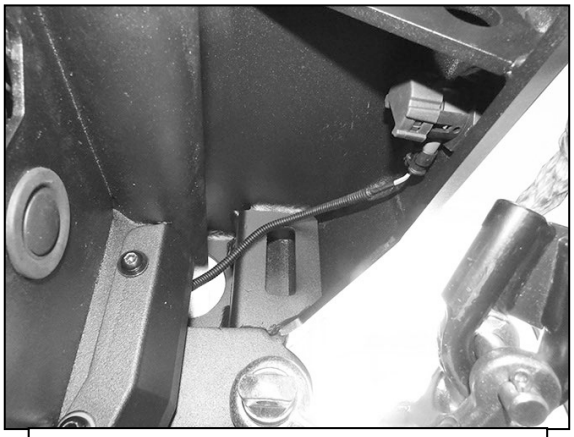

(Fig 30) Models with sensors, plug the Wiring Harness Extensions into the center sensors in the winch tray assembly (also see Fig 27). Driver/left side of winch tray pictured from below

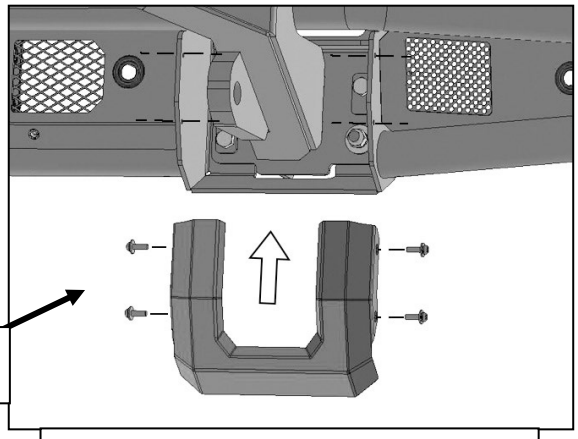

(4) 6mm Button Head Combo Bolts

(Fig 31) Attach U-Covers to Bumper. Driver/left side installation illustrated

Driver/left Side Installation Pictured

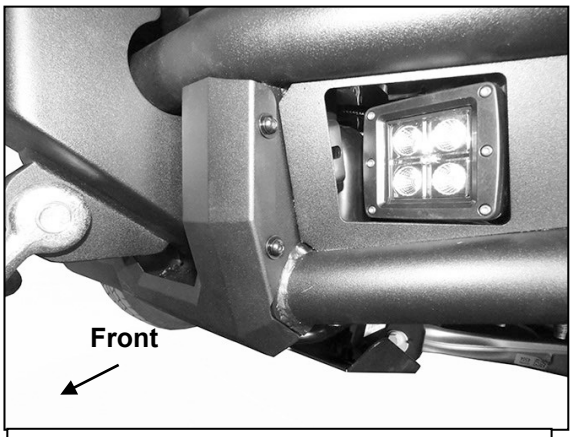

(Fig 32) Driver/left side U-Cover pictured

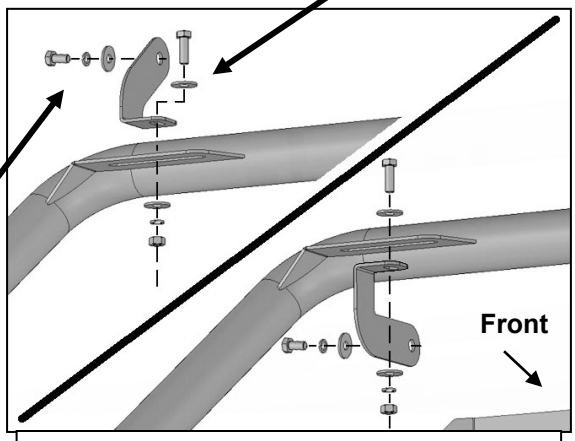

(Fig 33) Attach LED Upper or Lower L Brackets above or below tab on back of Hoop (optional)

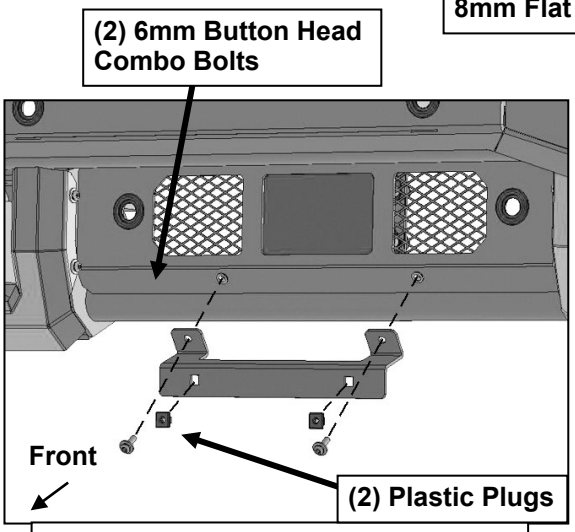

(Fig 34) Attach License Plate Bracket to front of Bumper (optional)

Complete Installation (Light, winch and cable guide not included)